MILITARY AND GOVERNMENT SERVICE PROVIDER.

mihai.ciuta@competdac.ro
+40 744 488 340

andrei.manea@competdac.ro
+40 743 492 214

DUNS NUMBER: 565502592

CAGE CODE: 1D06L

VAT NUMBER: RO26547827

ROMANIA OFFICE: Street Calea Santandrei 28D, Oradea, Bihor, Romania, ZIP: 410238

POLAND OFFICE: Street Sucha 3, 2nd Floor, Office 213, Wroclaw, Poland, ZIP: 50-086

BILLING ADDRESS: Street Leonardo da Vinci 11, Oradea, Bihor, Romania, ZIP: 410540

COMPETDAC

COMPETDAC

www.competdac.ro

2022 EDITION

COMPETDAC

www.competdac.ro

EQUIPMENT & CAPABILITIES

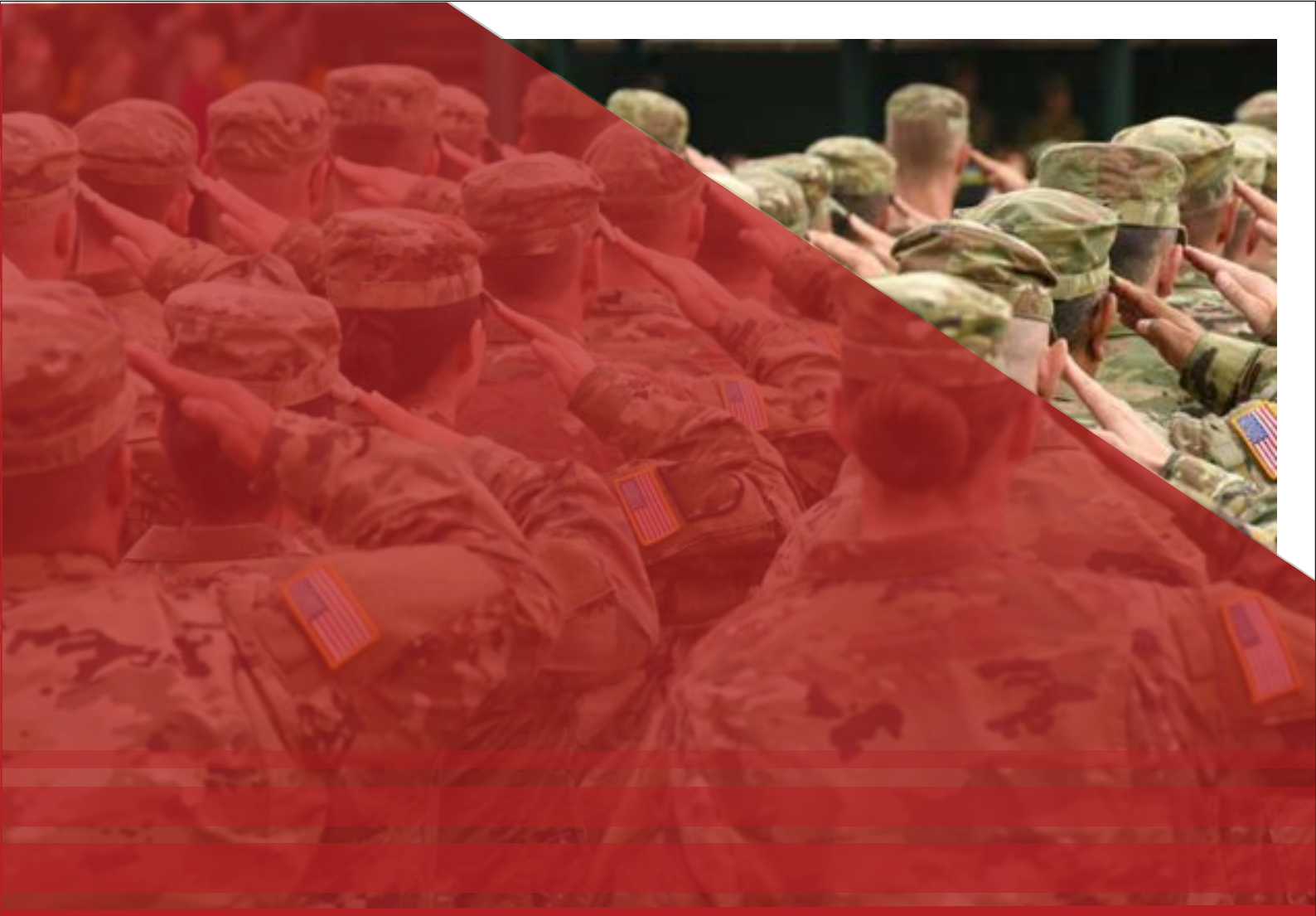

_their request,

our purpose_

CONTENTS



About Us.....4

1 Construction materials 6

2 Electrical materials 24

3 Ready to deploy 28

4 Storage solutions 32

5 Hand tools 40

6 Furniture.....52

7 Energy Solutions 56

8 Heating and cooling 62

9 Equipment 74

10 Workshops 77

11 Ramps 120

12 Containers 126

13 Cleaning solutions 134

14 Innovative products 148









"You Gentlemen have always been a great help, break your backs for us, deal with our last minute changes and it is greatly appreciated not only by myself and my marines but all of BSRF 18.1."

STAFF SERGEANT CAMPFIELD, DUSTIN J. S-4,
LOGISTICS CHEF 1 st BATTALION, 6th MARINES

ABOUT COMPETDAC



For the last 11 years we strived to always be the "first and the right choice" when it comes to shipping Military or Commercial Cargo and supplying the Armed Forces with Building and Construction Materials, Industrial Equipment and Maintenance, Repair and Operations Supplies.

We are a dynamic and innovative company whose main goal is to provide quality logistic and supply services throughout Europe and Africa. COMPETDAC means logistic support from transportation to material handling and also maintenance and repairs, construction and extensive supply.

Wisely taking advantage of our geographic position, we had successfully completed many Complex Program Management, Sourcing, Procurement and Delivery, Troop Exercise and Mission Support projects in Romania, Bulgaria, Poland, Germany, Belgium, Netherlands, Italy, Moldova, Ukraine and even Djibouti and we're still looking forward to future worldwide challenges.

OUR APPROACH

SYSTEM INTEGRATION

Our expertise in project management will ease up the process of accomplishing all sorts of military and governmental projects goals. We have been actively supporting DLA TLS MRO Prime Vendors and our subcontractors are DoD approved and fully operational.

UNIFYING MULTIPLE SOURCES

Using our broad network of suppliers and subcontractors we are able deliver to any type of essential and non-essential military grade supply, wisely considering the purchasing costs and specific national or international legal norms.

EXTENSIVE REACH

Based in Romania and Poland, thus having a geo-strategic placement int the U.S. Army Europe's operations theatre, we are able to research, respond and support in a timely manner to ensure the efficiency of the military operations.

QUALLIFIED PERSONNEL

Our specialists are proficient in Romanian, English, French and Italian, having many years of working in an international environment comprising both military and civilian elements being an important part of military, government and civilian projects.

CAGE 1D06L
DUNS 565502592



CONCRETE

Post Fixing concrete

Easy to use - just to add water into the hole while inserting the fence post (Example). Sets within 5 to 10 minutes.









Cement powder, conditioned in bag, ready to be mixed with crushed stone aggregates and water.

STEEL

Steel Rebar



Welded Steel Wire Mesh

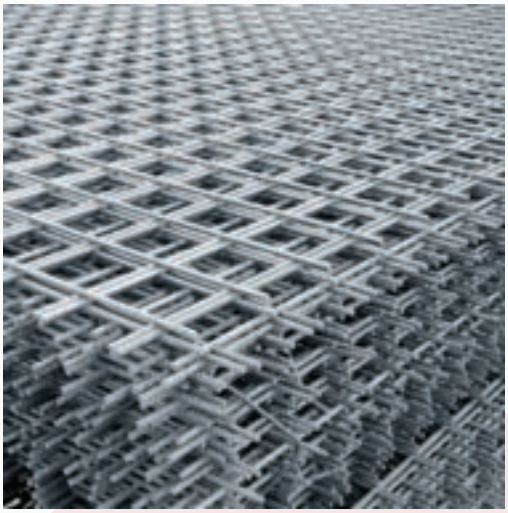

Round Steel Form Stakes with Holes



Used in concrete forming and many other applications.
Stakes are machine-pointend which allows them to be driven fast and easy into clay, rock or compacted soils.

Reinforcement Steel Tie Wire



Steel Angle Iron



STEEL

Barbed Wire



Concertina wire in large coils
to be expanded like concertina.



Concertina wire



Gabion basket

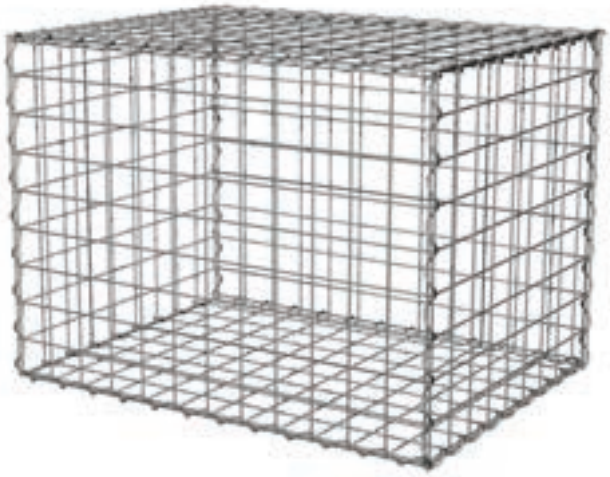

Post Cap 60x40mm w/3- Barbed Wire Corner Arm



Green Steel Fencing Posts



CONSTRUCTION MATERIALS

Vehicle Gate Kit, custom made



Personal Gate Kit , custom made



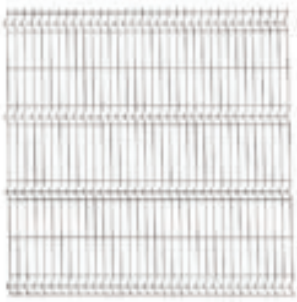

Fence Panel, Sport 203x250cm Galvanized



Fence Post Galvanized



Fence Panel Holders

Corrugated Steel Pipes

Spiral corrugated pipes, the best combination of strength and hydraulic efficiency, featuring helicoidal pattern and locked-steam construction, round shaped, from 12" to 14" in diameter.



AGREGATES AND SOIL

Granite Aggregate

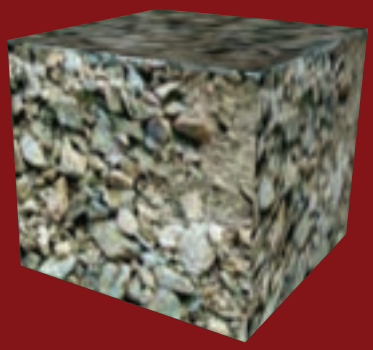



Crushed Stone Base
30-60mm

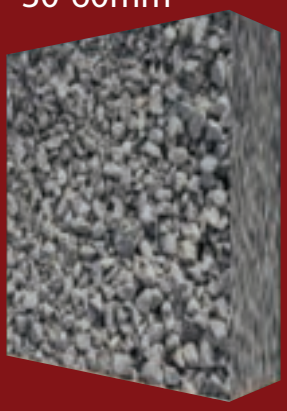

Crushed Aggregate



Rip Rap Class B (100-300mm)

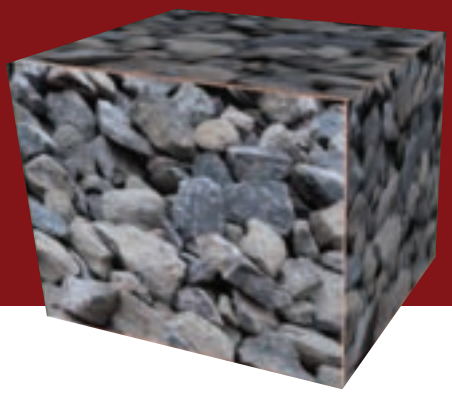

Top Soil





Concrete block molds

CONCRETE PREFABS

Concrete Paving









Concrete block barrier



WOOD



Wood stakes

Rough cut lumber

Pressure treated lumber





Plywood

Planed lumber





Laminated Wood

CONSTRUCTION MATERIALS





Nail, duplex

8D Nails





Anchor Rod

Nut



Metric Screw





Wood Screw



Exterior Sheet Metal Screws

Spring Washer



Washer, Hardened Steel



CONSTRUCTION MATERIALS

Stencils



Survey Roll Flagging High Visibility Glow-Pink



Single use Cocrete Cylinder Mold



Framed Extension Vinyl Window. custom made







PVC Drainage Pipe



Chair, Rebar Plastic



Gutter Brackets



Downspout Bracket



Pipe Elbow, 45 Degree



Gutter, half round

Splash Blocks



PLUMBING

Outflow/Transition Pipe



Elbow 45 Degree



Plastic Pipes



Socket Plug



Pipe Lube



Transition Pipe



Elbow



Gasket



ADHESIVES AND PAINT





Prime Coat



Finish Coat Stucco White



Fine Grout





Spray Paint



White Exterior Paint



Steel Roof Sealant



Poly-jet Lox

Epoxy Applicator Gun, Match to Epoxy Mix









ADHESIVES AND PAINT

Industrial Quik -Mark,
Inverted Marking Paint Water-Based



Caulk Gun Manual, Comercial Grade



Concrete Anchor Adhesive, Epoxy
Max Cure Time 8 Hours



Joint Sealing Compound

Self-Leveling Concrete Sealant for Control Joints



LIFTING, TYING & CUTTING

Steel Cable/Wire Rope Cutter



Thimble for 6x19mm Cable



Turnbuckle Hook or Jaw Connection



Steel Cable Clamp



Steel Cable, 3000 LBS Breaking Strength





Forming wedges





Steel Traffic grate



Screws

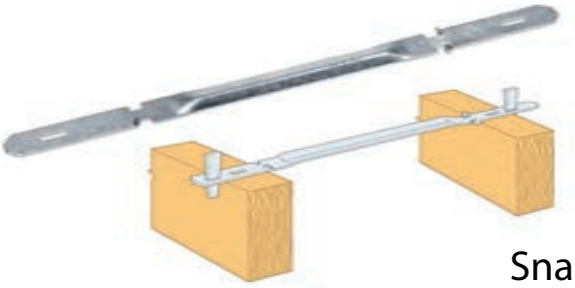

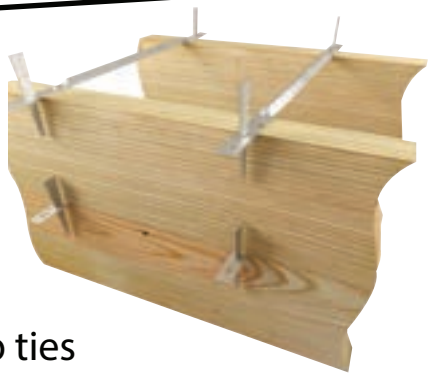

Snap ties

Column anchor connector

Rebar saddle bracket



Column tap T shape

Connector beam
to end column







WOOD ACCESSORIES

PLASTIC AND PVC



Pipe,Culvert, for external sewerage



Drainage Pipes

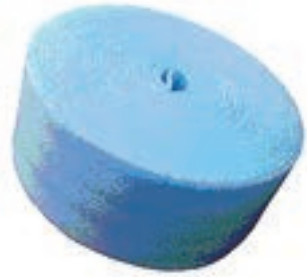

Styro Foamplate



Rebar chair



Spacers



Vapor Barrier





Grounding Rod Concrete Block Out Form

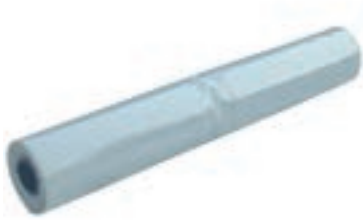

PVC Transparent Plastic Foil

Cable Wire Nylon
Zip Ties Wraps





Drain Hose

ELECTRICAL MATERIALS



Rocker switch
and push button reflex
SI Alpine white



Pole Switch Cover Frame



Cavity Wall Socket



Single Pole Switch



Device Mounting box
C- profile



Single Outlet Water Proof



Modular 2gang Socket Cover



Socket C-Profile

LIGHTING PROTECTION ELEMENTS

Cable Loop



Clamp



Acorn-Type Ground Rod Clamp



Aluminium Standard, Main Conductor



Clamp Stainless Steel U-Bolt



Copper Compression Lugs



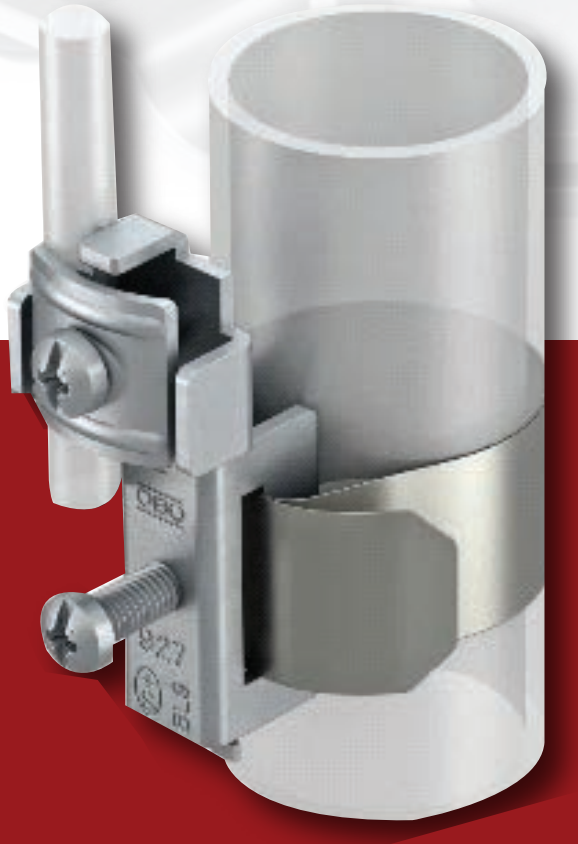



Copper Conductor, Hard Drawn Bare

Stainless Steel V2A External



Light Fixture,Led Wrap around



Outdor Integrated Led

Emergency / Exit Lighting Indoor LED
European/International





ELECTRICAL MATERIALS

Junction Boxes





Connector Cable

Hager Output Plug



63A RCD 1 pole w/Neutral

Fuse Breaker 16A Cat B







Hager Imput Plug

Bus Bar



Wire Clamps



63A RCD 3 pole w/Neutral



Clamp Wire



ELECTRICAL MATERIALS

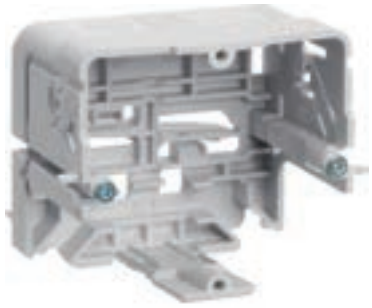

Box, Duplex Receptacle



Single outlet Receptacle w/receptacle box



Interior Wiring NYM-J



Connector Cable



AEM CST0410 Surge Arrester



Air Terminals

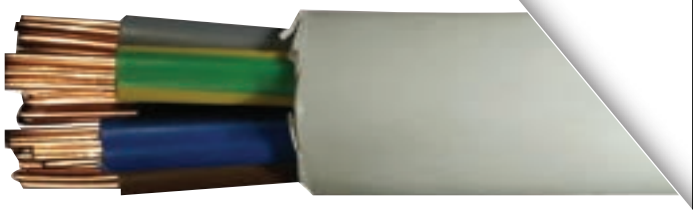

Interior Wiring NYM- J5 wire x 16 mm



Grounding Rod Copper-Clad



Raceway (Balustrade lower 70mm/170mm pure white 1m)

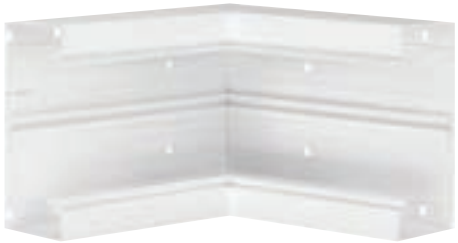

End Plate

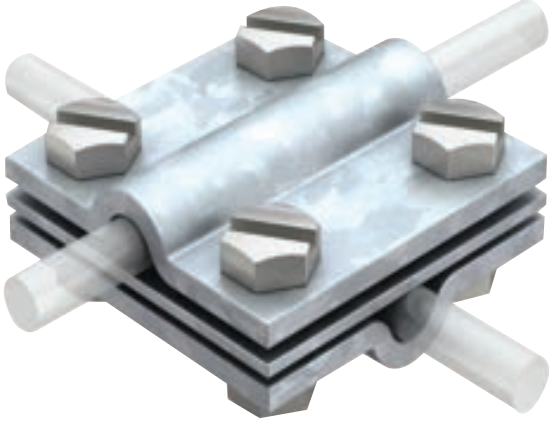

Air Terminal Clamps

Roof Grounding Cable Fasteners





Air Terminal Base



Alum Air Terminal



Panel Box



One Hole Cable Clip



Self Tapping Screw
with Hex Washer Head
Zinc plated



Split Bolt Connector Clamp



Grounding Cable



Wire

STAINLESS STEEL CABLES ACBM

POLYPROPYLLENE ROPES ACBM





ARTICULATED CONCRETE BLOCK MATTRESSES (ACBM)

The Articulated Concrete Block Mattress (ACBM) is a rectangular unit made out of concrete blocks, joined together by polypropylene ropes or stainless steel cables.
The mattress is flexible in many dimensions and is available in a range of thicknesses to suit the conditions required.
The ACBM is used for the anchorage and protection of underwater pipelines and cables and for protecting the foundations of structures against water scouring.
Materials used are selected to offer the required design life in sea water and are chemically stable. There is no significant reduction in compressive strength of the concrete blocks.

Lifting of the ACBM is carried out using a lifting frame which connects to the lifting loops or stainless steel cables.
The high degree of flexibility allows the mattress to bend without compromising its integrity.

A key benefit of our ACBM is that the mattress formwork is modular and can be transported where needed and the mattresses cast as close as possible to the place of deployment.
This limits expensive transportation costs of the product, and also bespoked mattress sizes can be constructed.

Unit Weight		
Lifted	340 Kg/m 2	± 10%
Weight		
Lifted	2.15 t	± 10%

Dimensions		
Length	m 2.50	± 5%
Width	m 2.50	± 5%
Thickness	m 0.20	± 0.02

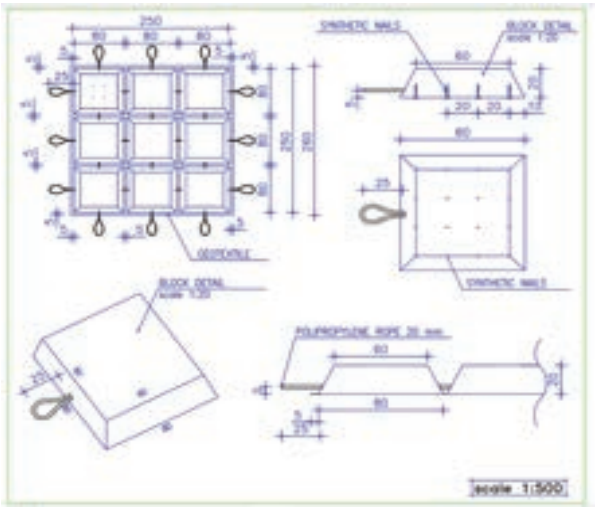



READY TO DEPLOY

Lifting system
With a special framework hooked to the rope's edges

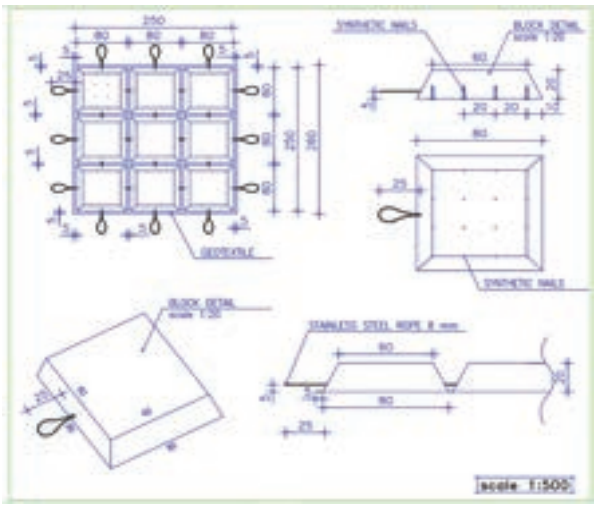

FLOORING AND MATTING

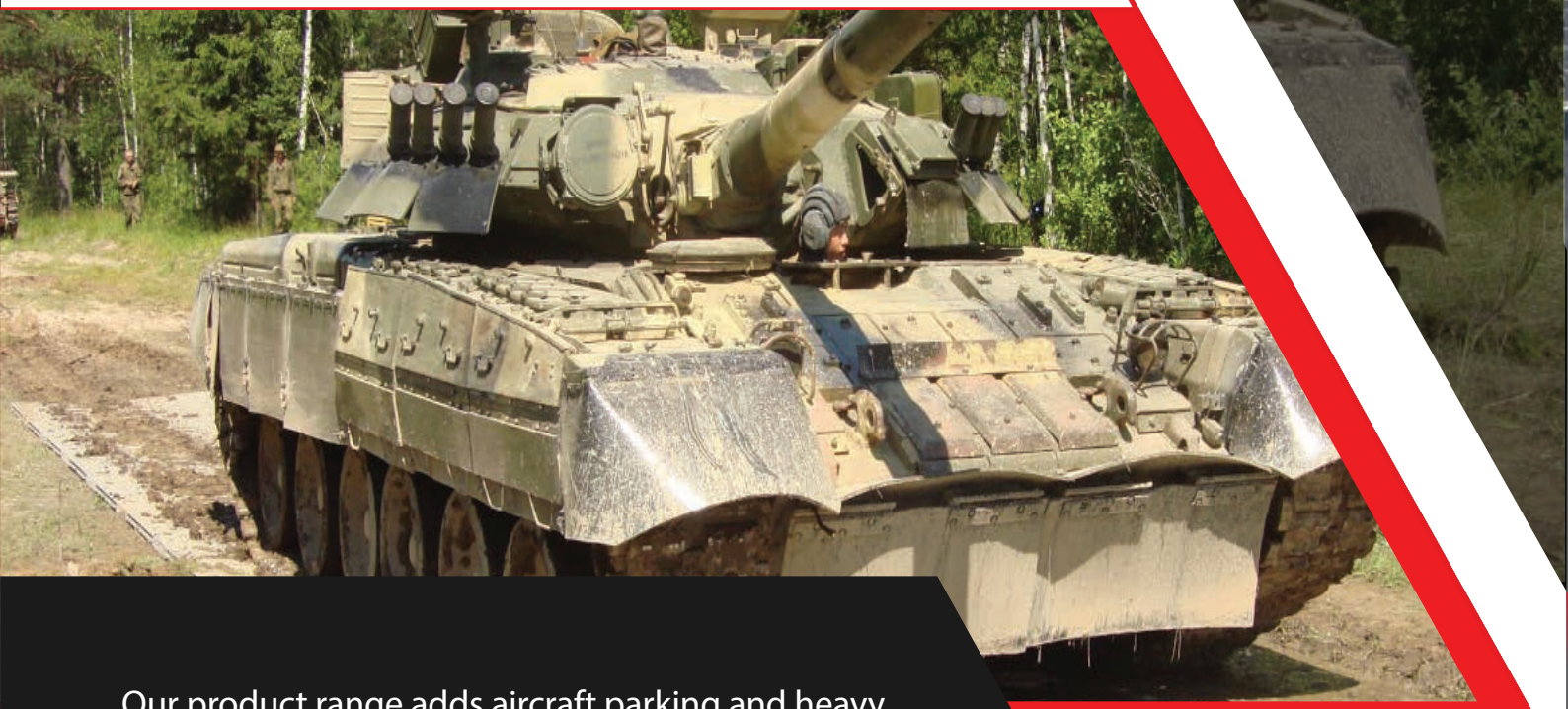

Our product range adds aircraft parking and heavy duty strategic matting to our capabilities.

Rola- Trac products are developed having the user in mind, making it one of the most straight forward temporary flooring/matting systems available.

The design allows rapid deployment with minimum manpower and no speciality tools.

Widely endorsed by various worldwide military and aid organisatins, for ease of procurement, all Rola-Trac military fllooring products are available having NSN (NATO stock number).

Our products are widely used by many key NATO forces including the British and American Armed Forces, for military helipads, storage, shelter flooring, workshops and access- ways.







It is a heavy - duty temporary flooring panel system, which enables cars, trucks and other vehicles to travel over all types of terrain.



The composite interlocking panel system creates a continuous surface capable of dealing with all road going vehicles and extreme static loadings.

It is entirely man- handbale and is secured by an inbuilt connection device that requires no special tools to operate. Each panel has 9 attachment points that enable the user to bolt on accessories where needed.



framework AX:A

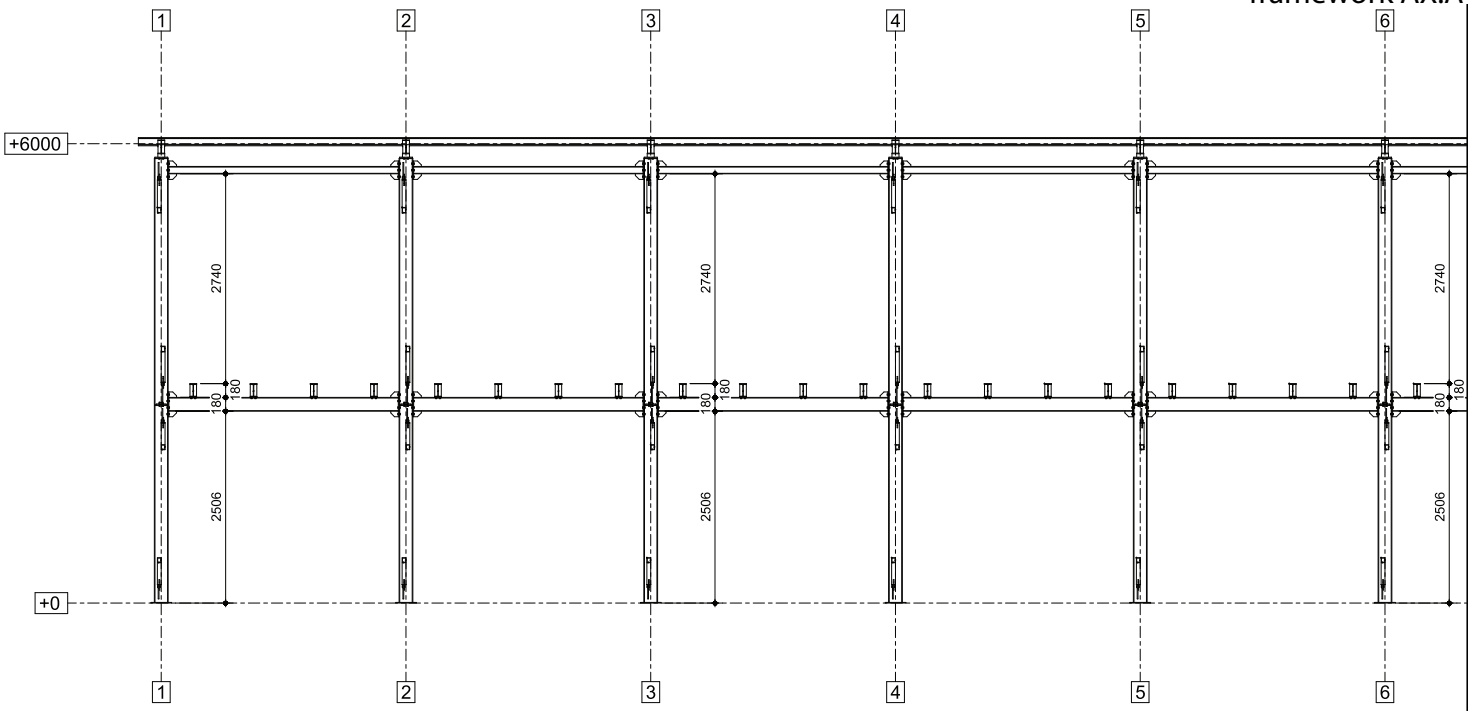

floor plan

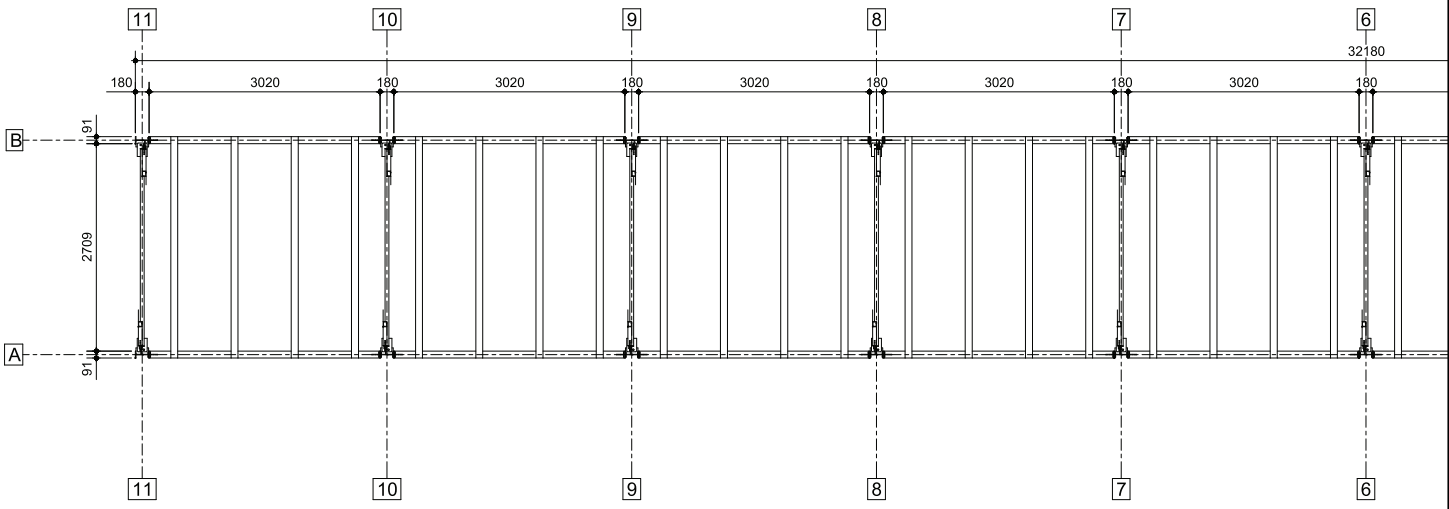

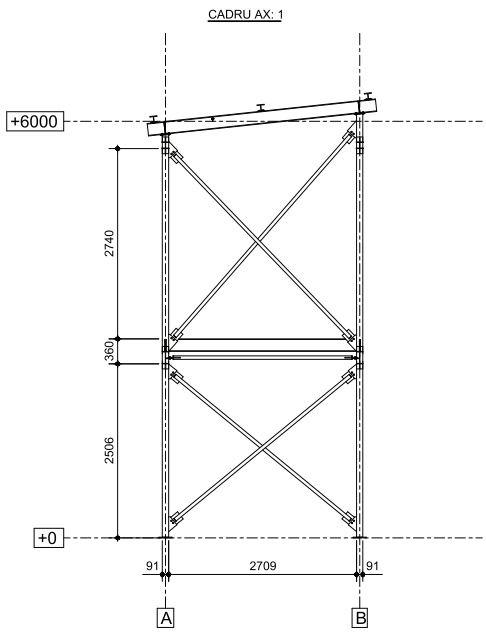

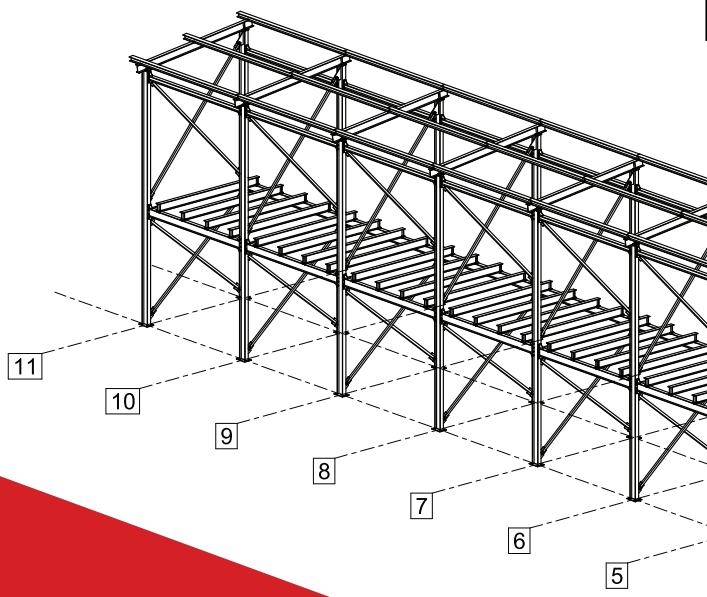

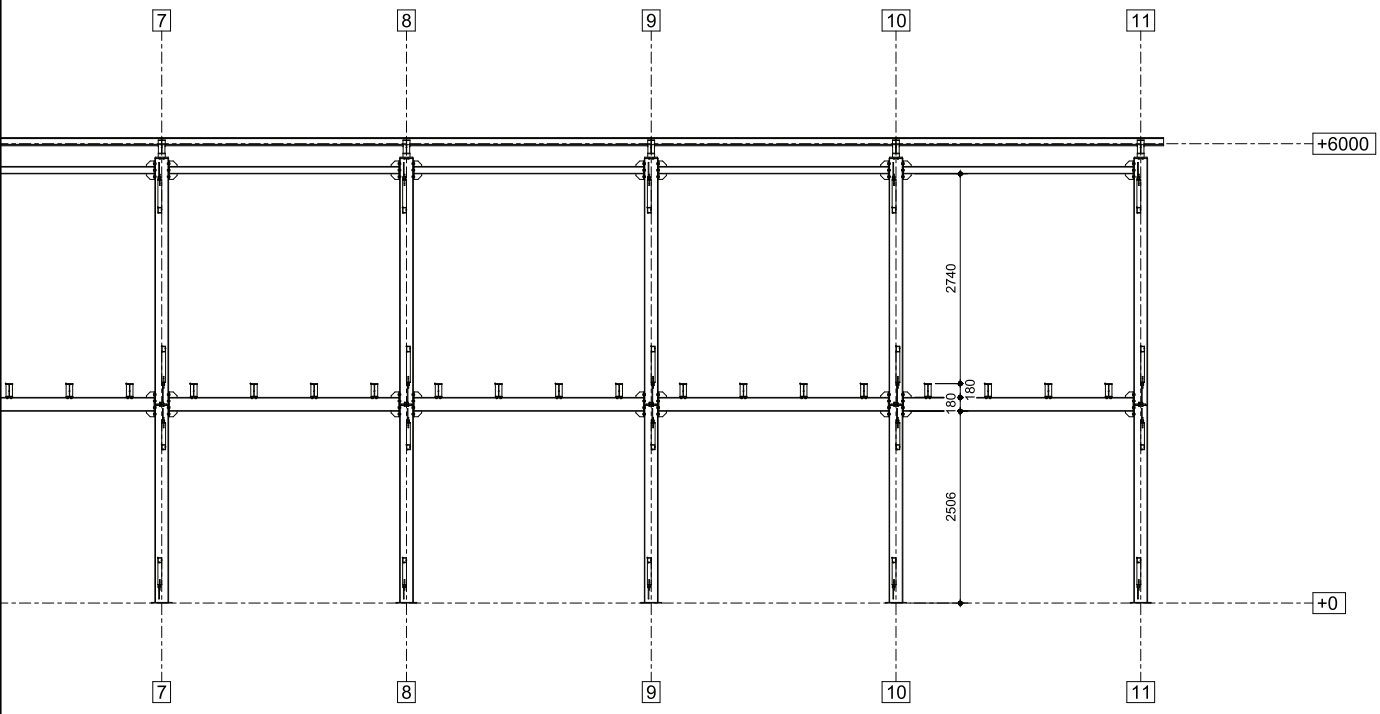
7
8
9
10
11
+6000
2740
180
180
2506
+0

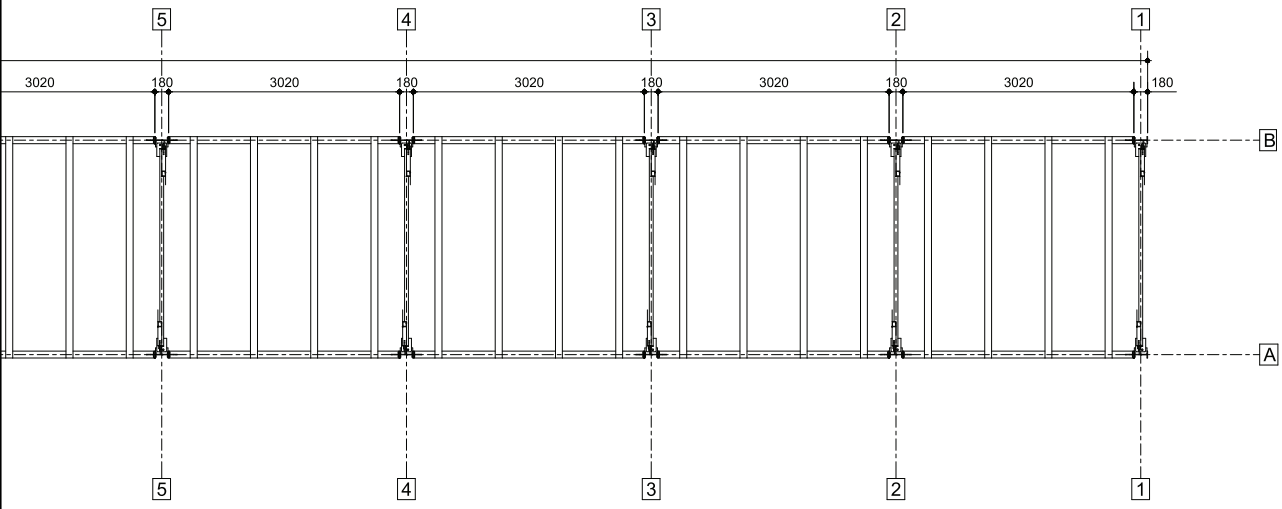
5
4
3
2
1
3020
180
3020
180
3020
180
3020
180
180
B
A

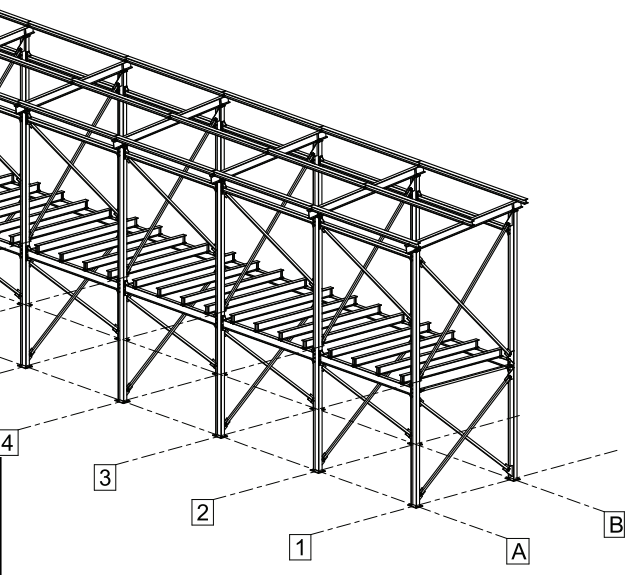
4
3
2
1
B
A





framework

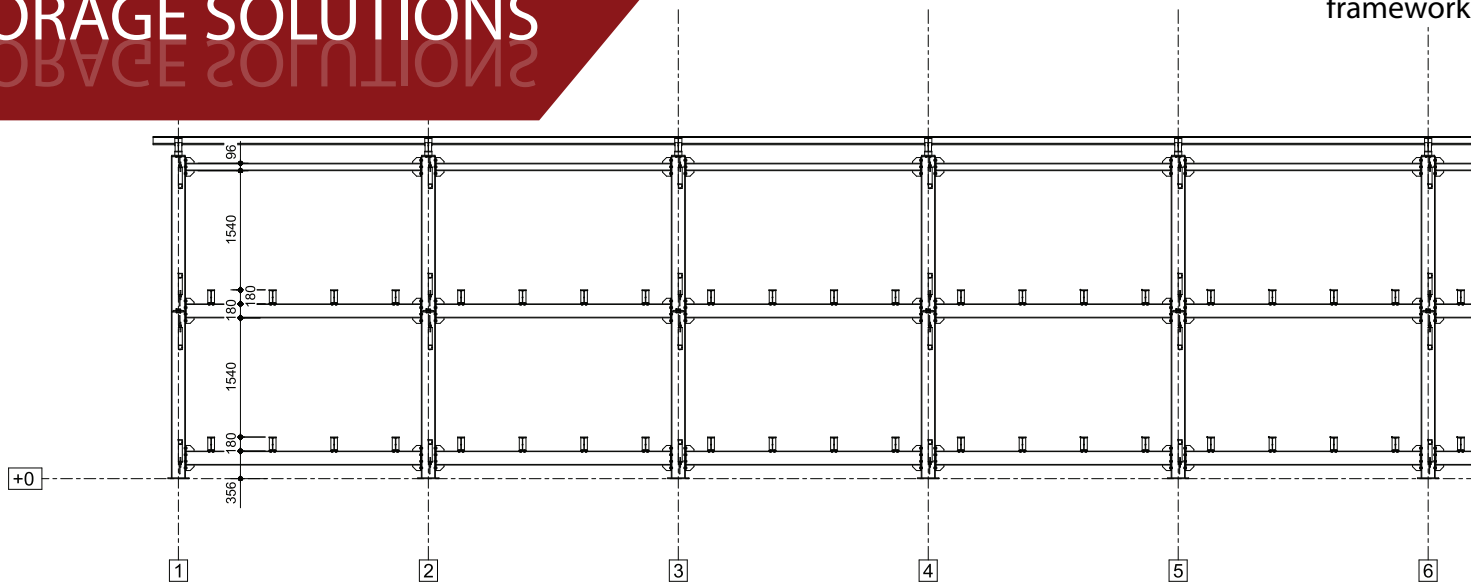

floor plan

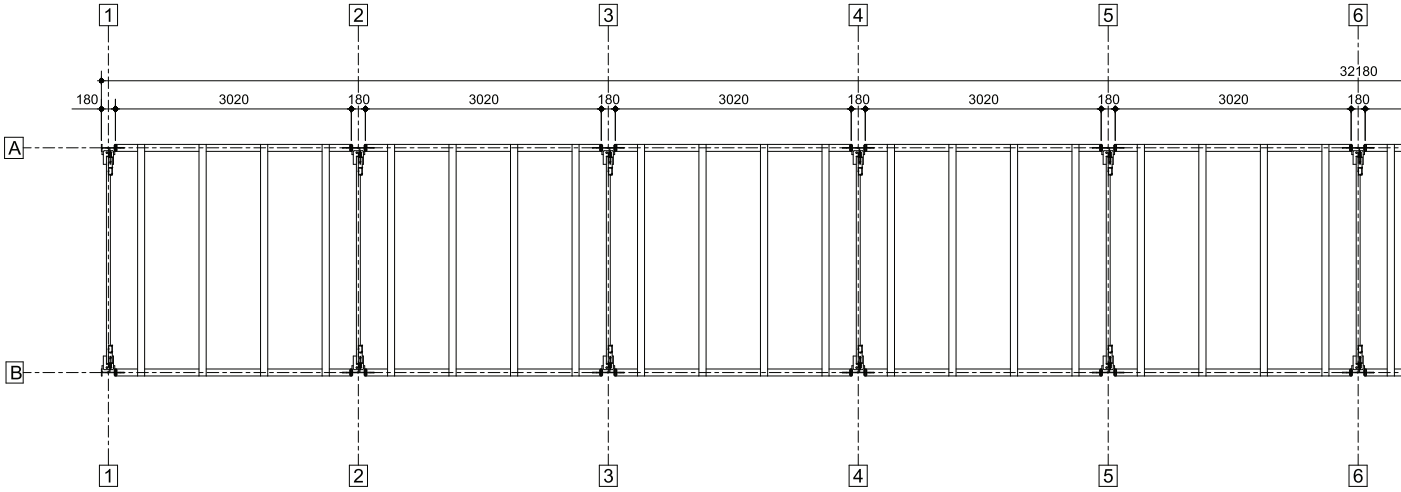

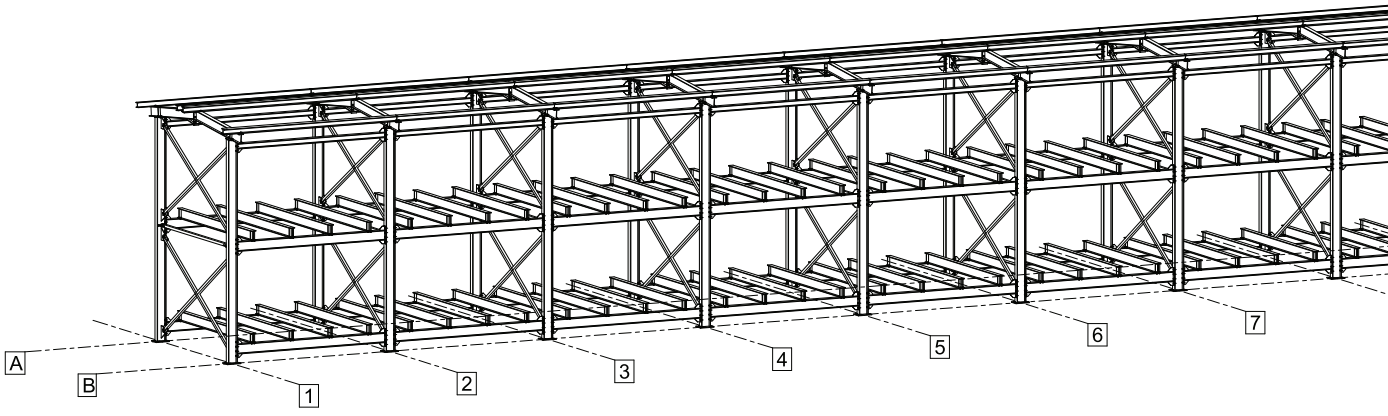

CADRU AX: 4

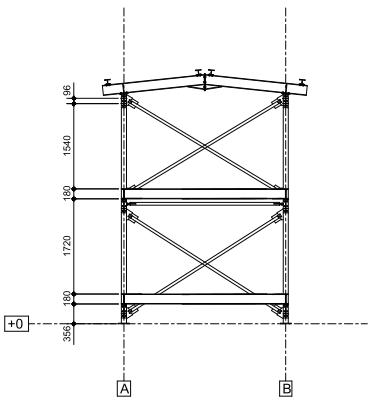

Our storage solutions are designed to protect exterior loads from rough weather conditions having an integrated roofing system.
Suitable for military cargo, tricon containers and bicon containers.

AX:A

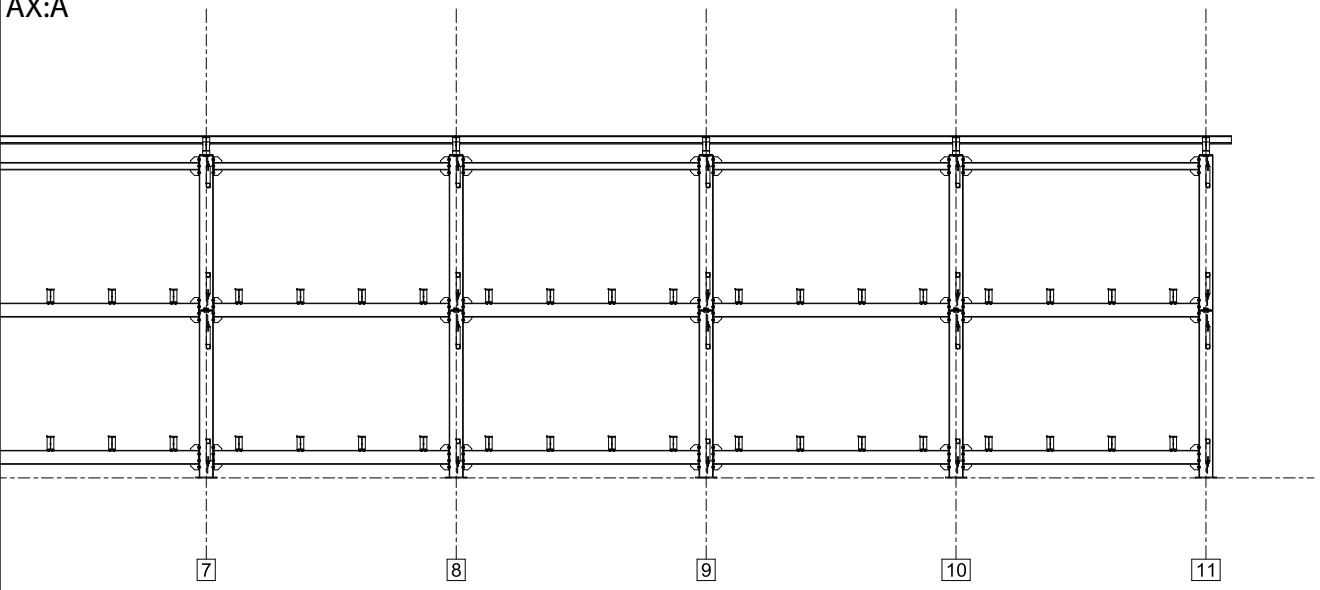
7
8
9
10
11

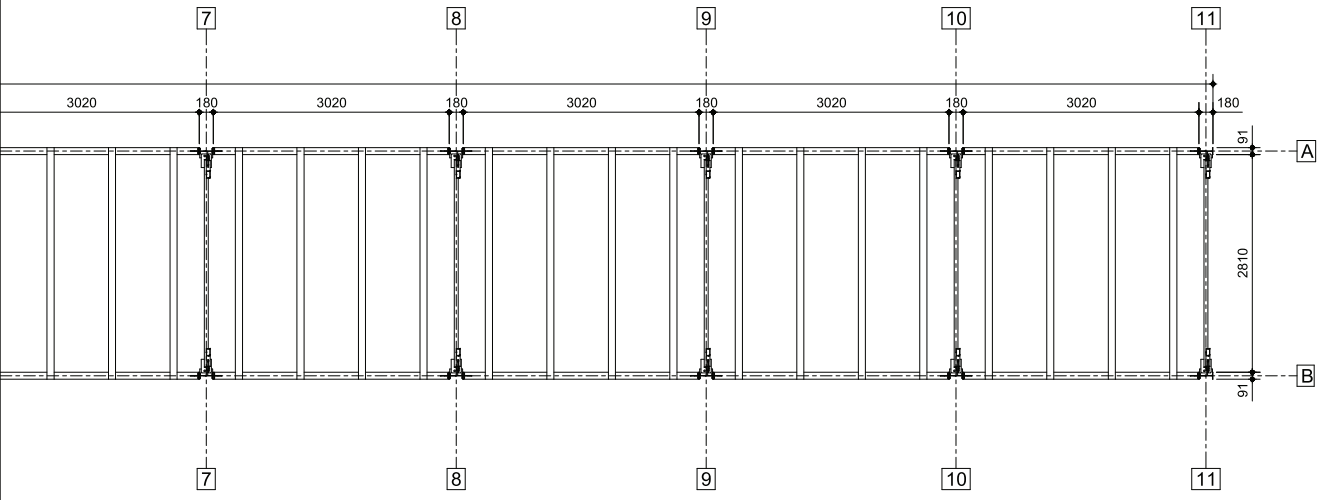
7
8
9
10
11
3020
180
3020
180
3020
180
3020
180
3020
180
91
A
2810
B
91
7
8
9
10
11

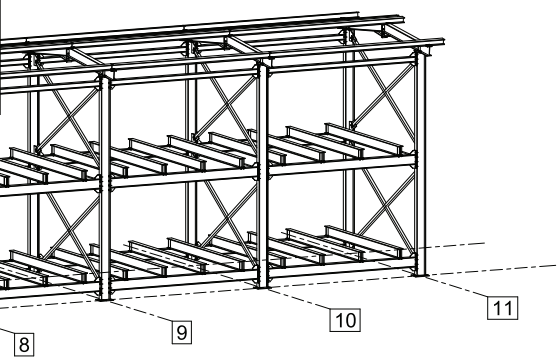
8
9
10
11

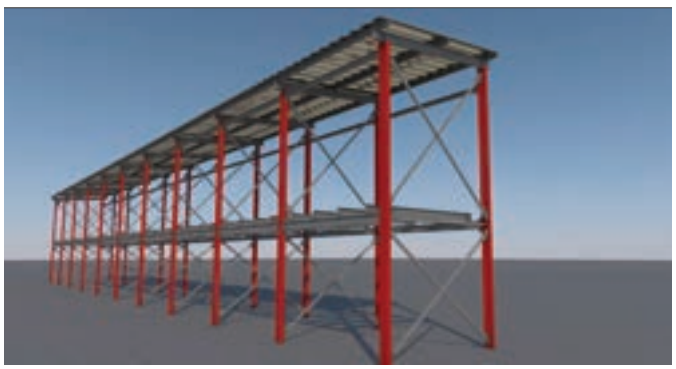





framework AX:A

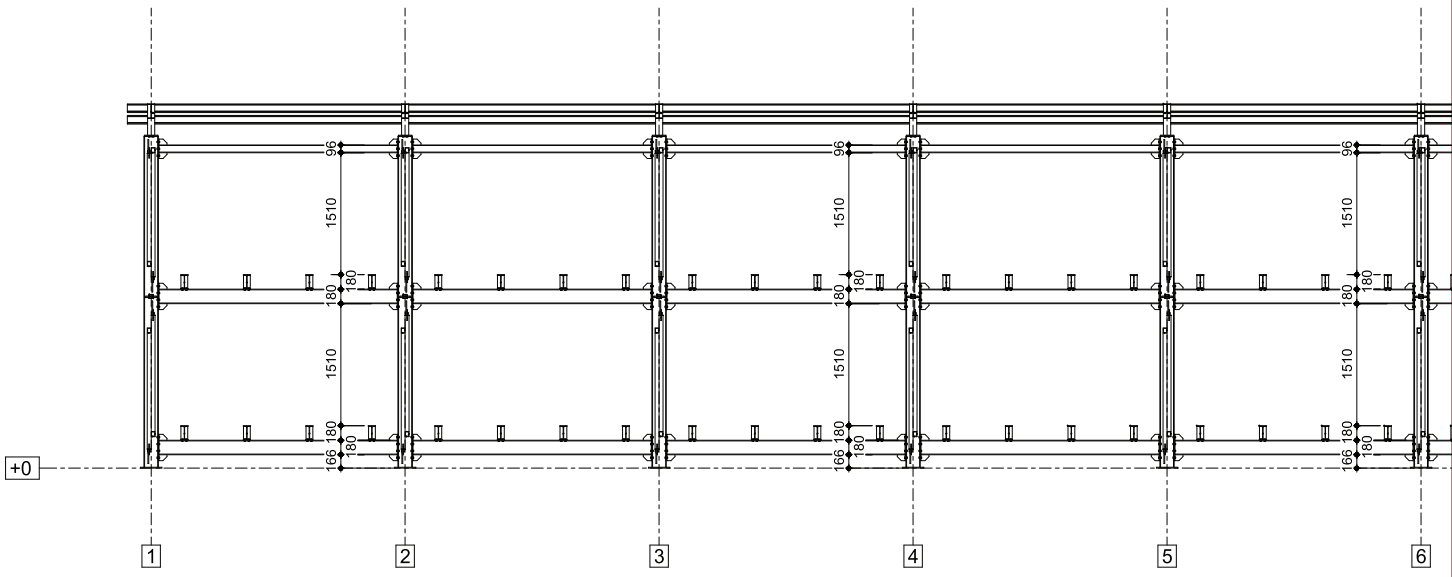

floor plan

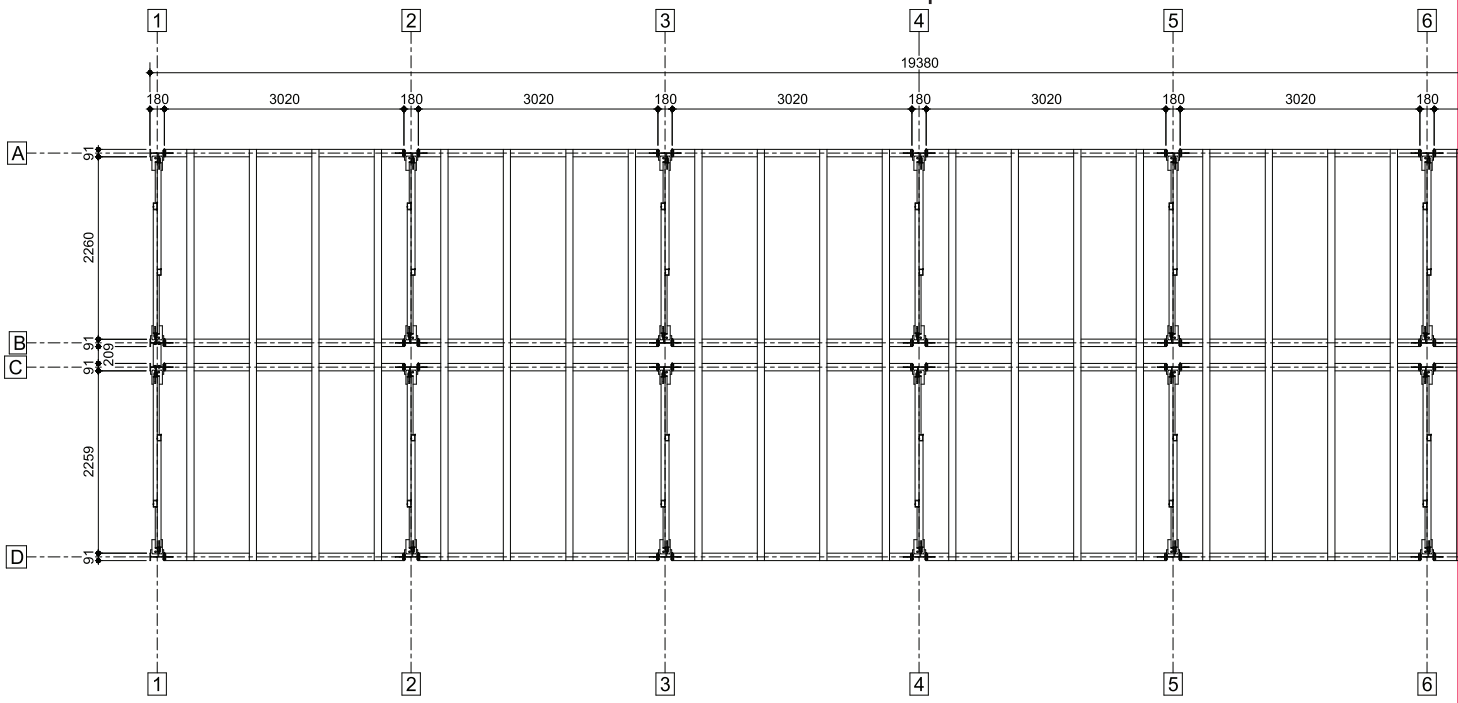

3d

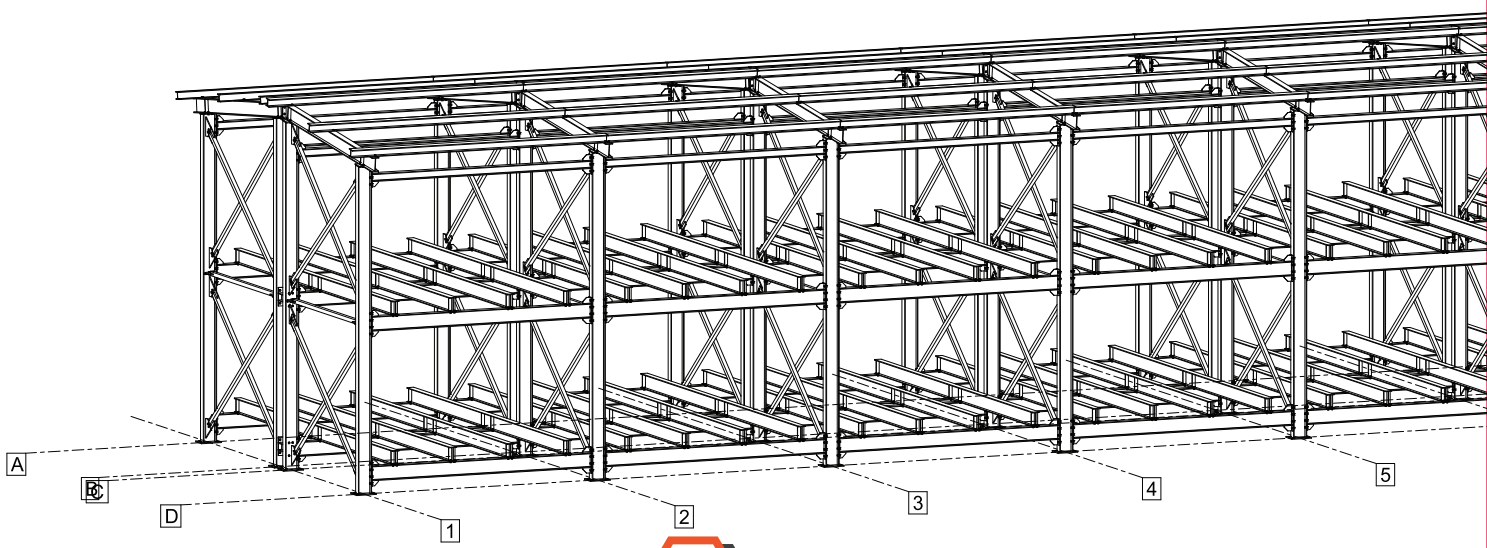

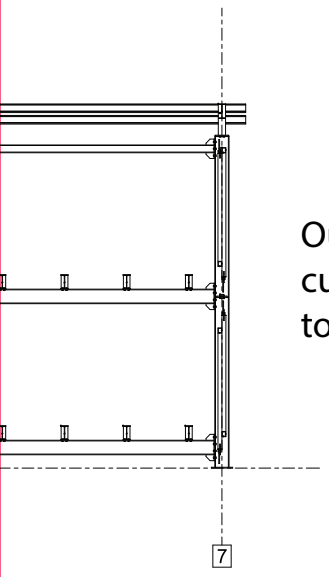

Our storage solutions are fully customizable, being easy to adjust to any type of military cargo.

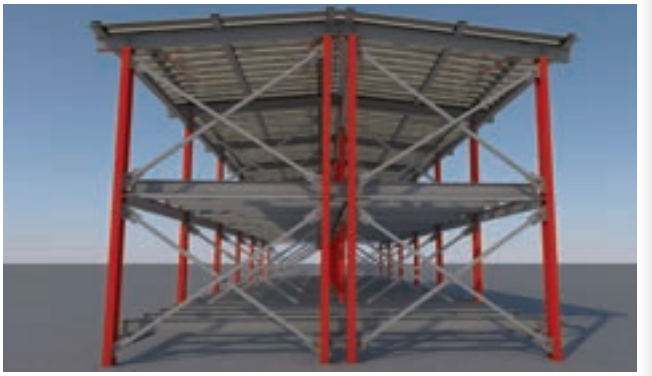

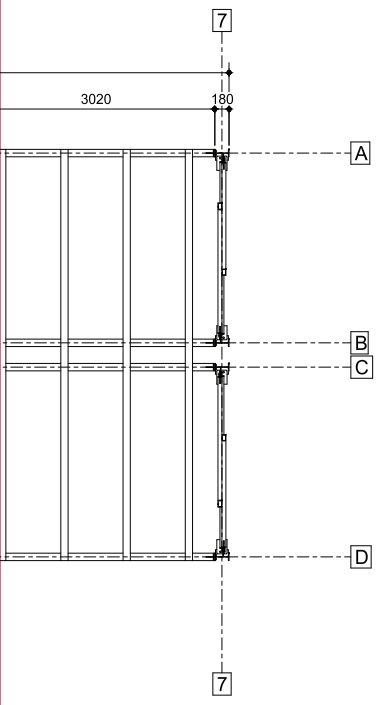

framework AX:4

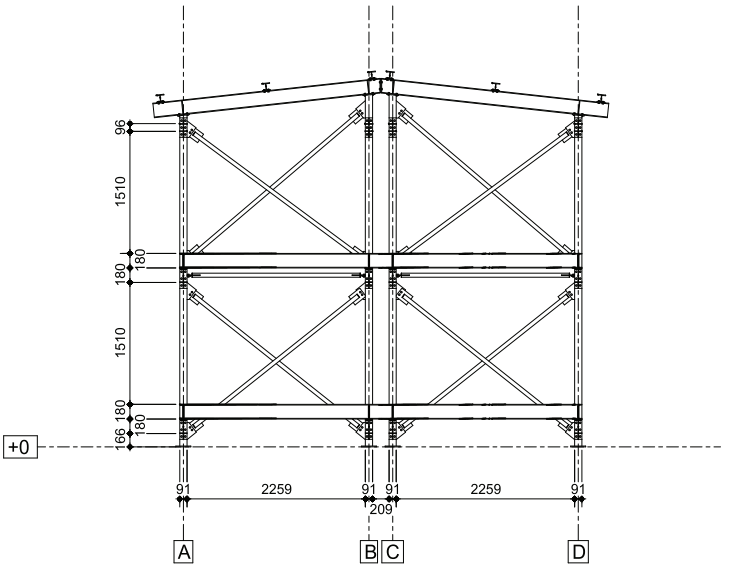

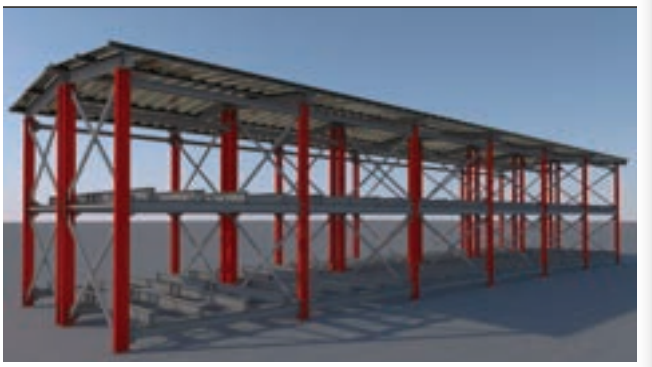

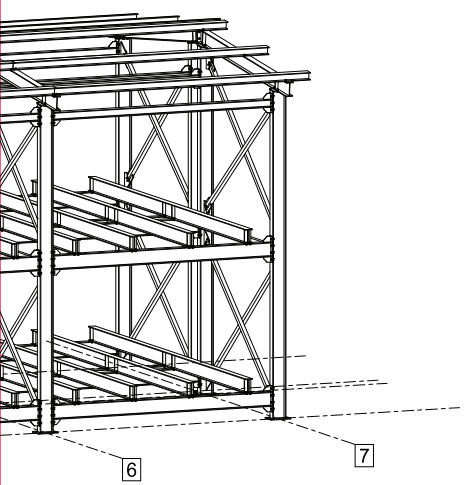

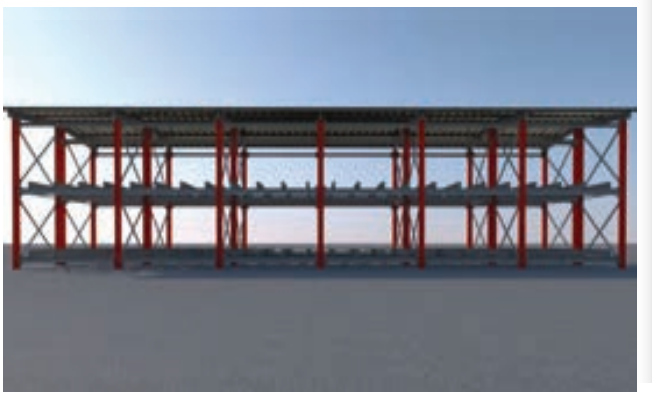

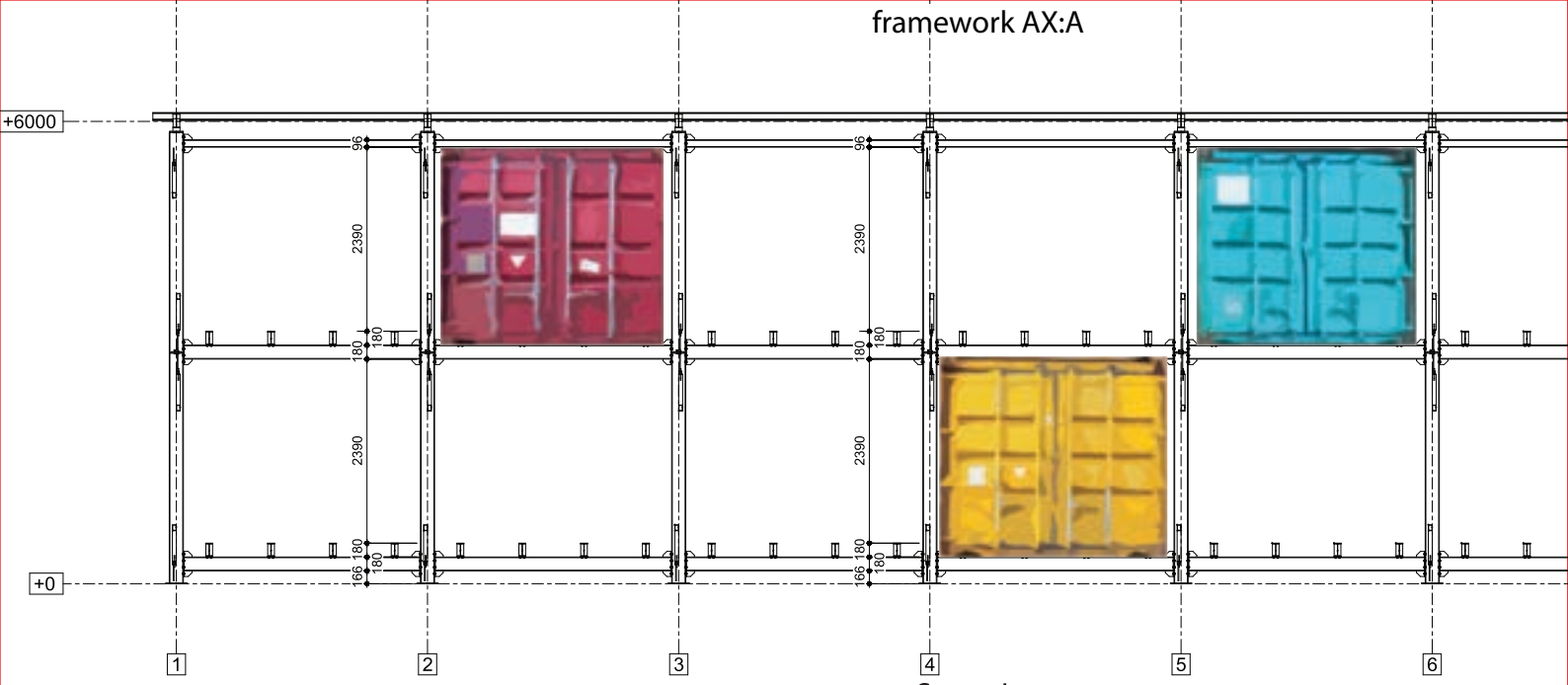

P floor plan

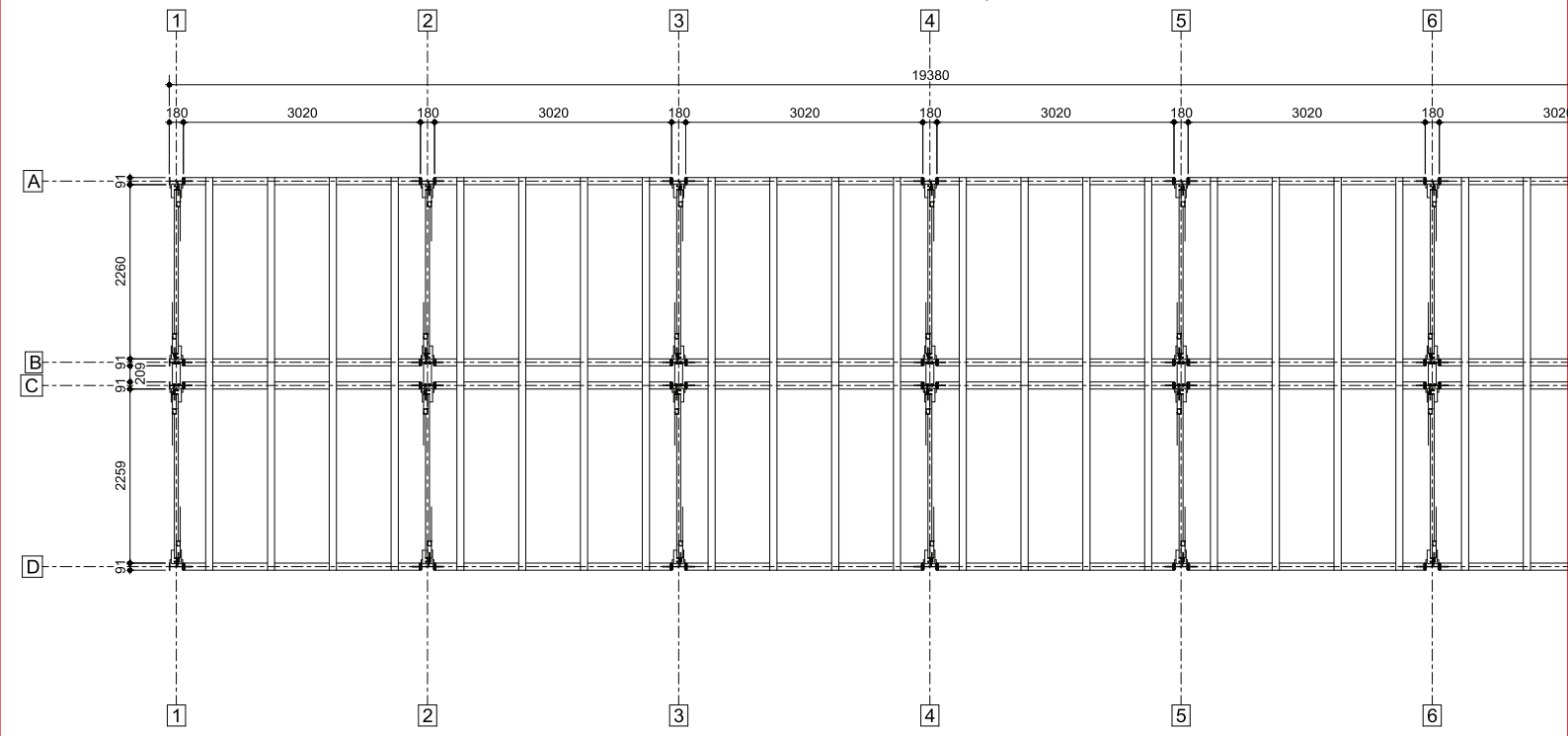

STORAGE SOLUTIONS FOR MILITARY CARGO

Fitting TRI and BI - con type containers and most of standard size pallets, the rack system is key solution for your storage space improvement and weatherproofing military cargo.

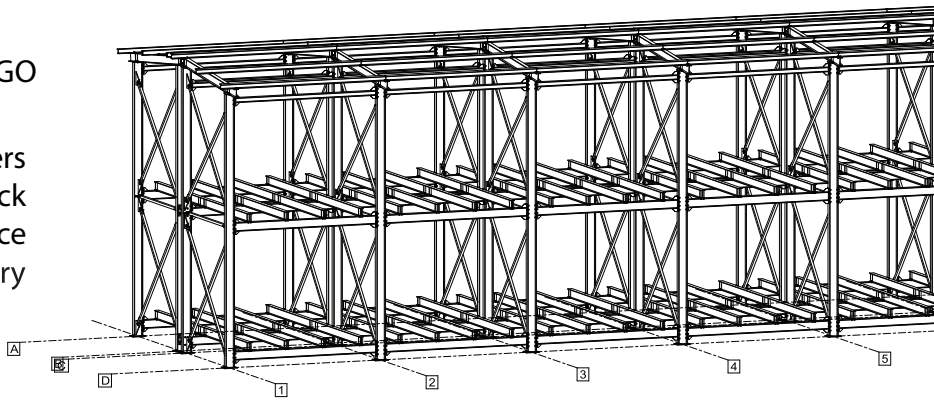

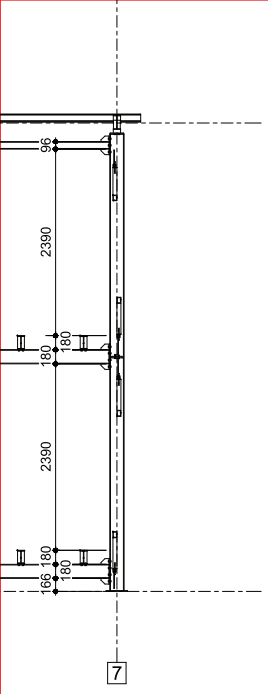

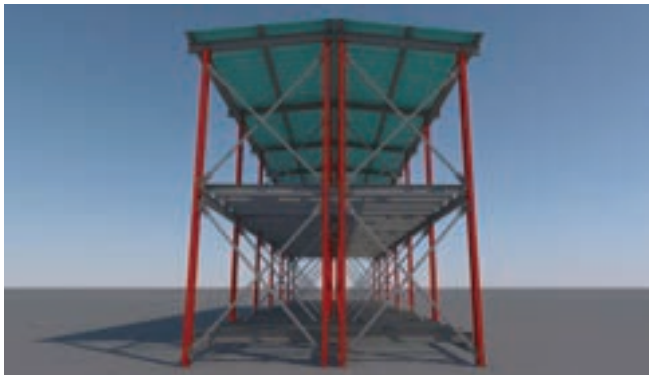

framework AX: 4

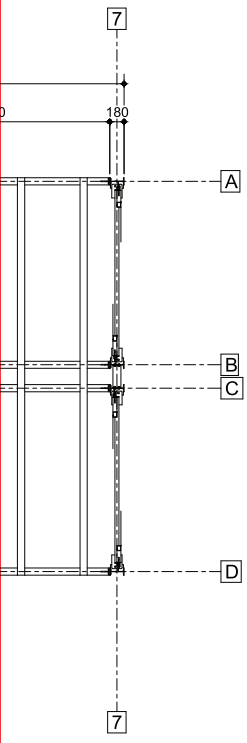

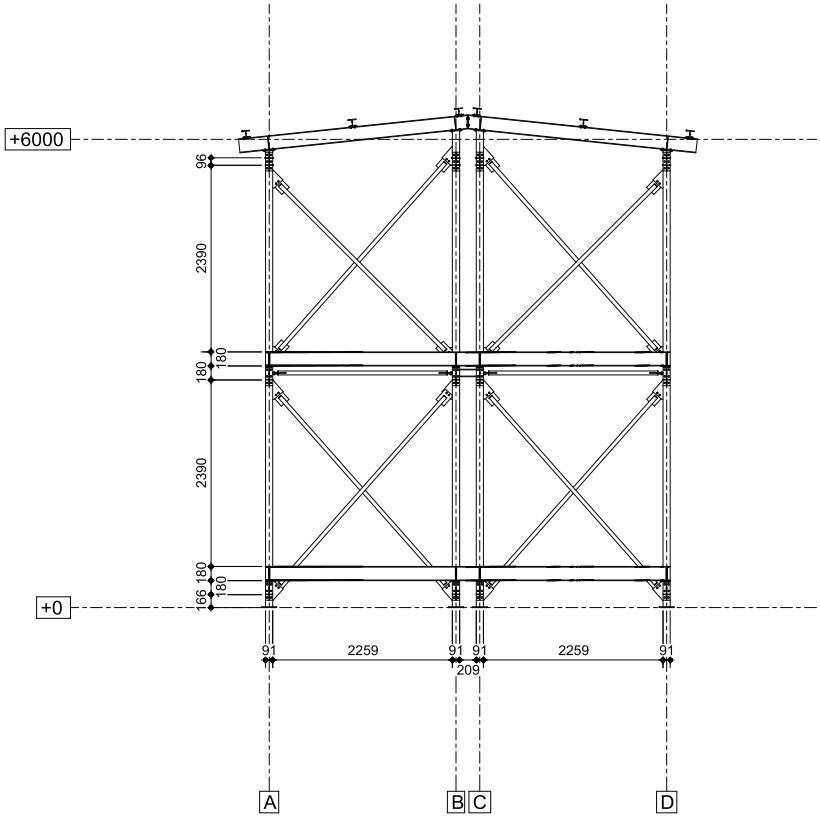

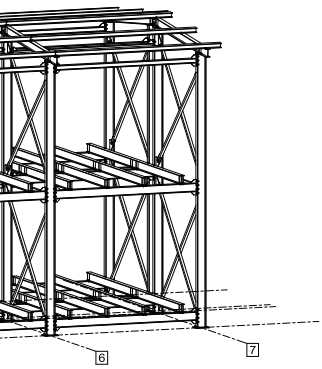

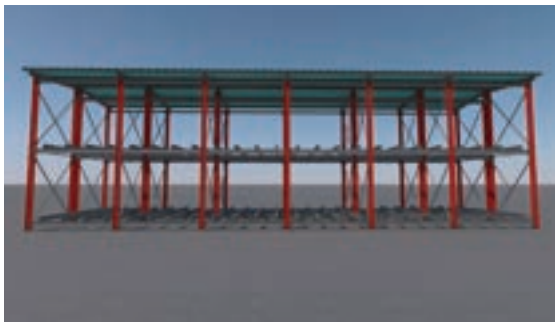

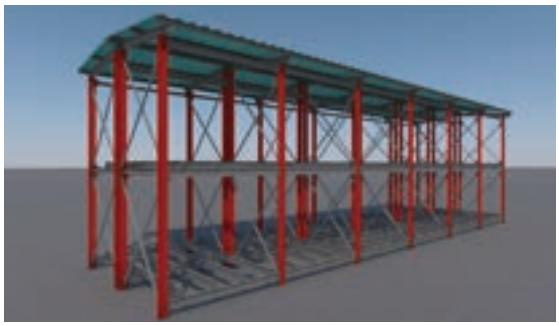

WRENCHES

Open end wrench



Combination wrench, short type



Ratchet ring wrench



Insulated single offset ring wrench



Offset ratchet ring wrench

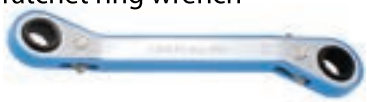

Slogging open end wrench



Adjustable wrench



Hook wrench



Double ended offset socket wrench



Tubular box wrench



T-handle hex wrench



Spark plug wrench



Socket remover



RATCKETS, SOCKETS AND ACCESSORIES

Reversible ratchet 1/4”



Socket 1/4”



Insulated socket 3/8”



Socket 1/2”



Socket 3/4”



Socket 1”



Impact socket 3/8”



Swivel handle 1/4”



PLIERS

Multifunctional electrician's pliers 	Wire stripper 
Combination pliers 	Tower pincers 
External lock ring pliers, straight 	Electronic combination pliers 
Variable joint "HYPO" pliers 	Revolving punch pliers, with 6 punches 
Grip pliers 	

INSULATED TOOLS AND PLUMBING TOOLS

Insulated tools

Insulated single open end wrench 
Insulated socket 1/2", 6 point 
Combination pliers for heights safe work 
Electrician's screwdriver with insulated blade 
Electrician's scissors 
Insulated saw 

Plumbing tools

Heavy duty pipe wrench 
Variable joint "HYPO" pliers 
Tube cutter 
PVC pipe cutter 
Chain pipe wrenches 

CABLE CUTTING, STRIPPING AND CRIMPING TOOLS

Powershark cutter

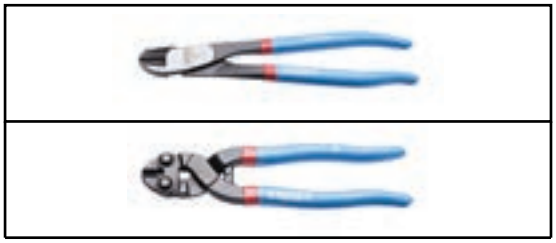

Insulated knife



Crimp grimp pliers



Universal tin snips



Bolt cutter



Tree pruner



Professional ball joint puller



Puller with two adjustable arms



Puller with three adjustable arms



TIN SNIPS AND BOLT CUTTERS/ PULLERS

SCREWDRIVERS

Flat screwdriver TBI	
Crosstip (PH) screwdriver TBI	
Hex screwdriver CR	
Screwdriver TBI with TX profile	
Square screwdriver TBI	
TBI handle for bits 6,3	
Impact screwdriver	
Adaptor 1/2"	

Locksmiths'hammer	
Masons'hammer	
Welding hammer	
Carpeteners'hammer	
Claw hammer	
Club hammer	
Dead blow hammer	
Flat chisel	
Drift punch	

HAMMERS, PUNCHES AND CHISELS

PNEUMATIC TOOLS AND ACCESSORIES

Pneumatic sander



Pneumatic filter regulator and lubricator 1/4"



Composite pneumatic reversible ratchet



Stubby impact wrench



Pneumatic angle grinder



Pneumatic drill



Pneumatic duster



Stroke pneumatic hammer



Pneumatic ratchet and
socket set 3/8" in plastic box



Electronic torque wrench



Try square



Alu- spirit level



Feeler gauges



Aluminium screeding level



Flat rule



Calliper with Vernier scale



Measuring tape



TOOLS FOR ELECTRONIC AND AUTOMOTIVE TOOLS

Electronic combination pliers



Flat electronic screwdriver



Set of electronic pliers and screwdrivers in plastic box



Strap wrench



Car light tester 6



Wheel nut wrench



Roller- type stud extractor



Valve spring compressor



Round peen end dolly



Quick IRONGATOR engineer's vice with quick moving system



Flat cutting-off wheeles, for steel



Joiner's clamp



Screw extractor



Hacksaw



Flat scraper



Flat file with handle, bastard



Awl with round straight blade



Set of screwdrivers with T handle in SOS tool tray



Flat tweezers



Hand riveter



Tyre level with handle



Combination wrench, long type, for heights safe work 
Combination pliers, for heights safe work 
Flat chisel with guard, for heights safe work 
Tool belt 

Maintenance tool set ,premium



Set of wrenches in SOS tool tray



Set of tools for air-conditions



TOOL STORAGE

The double safety lock system , with drawers having a 97% opening angle, can handle loads up to 80 kg. M12 ball joint pegs are present underneath the cabinet.

18 mm chipboard are mounted on the upper decks which provides an elegant appearance and easy operation.



Width: 410
Depth: 570



Width: 560
Depth: 570



Width: 560
Depth: 725



Width: 710
Depth: 570



Width: 710
Depth: 725



Width: 1010
Depth: 570



Width: 1010
Depth: 725

3 mm rubber plate available on the drawer base, and either plastic separator or 3x3 metal separator can be applied having 3 or 4 channel options.



Mobile Workbenches are suitable for use in any production, maintenance, or servicing area. The 30x30x1.5 mm box is manufactured from metal profile and is electrostatic powder coated.

On demand can be equipped with peg boards, electricity panels, fluorescent lamps, clamps, LinBins. Different cabinet mounts can be alternatively mounted under the carts.



The table tops are produced out of pinotex, painted 25mm MDF plates. The plate tops can be rubber, galvanied sheet or stainless sheet according to the needs.

The rubber sheets are attached with galvanized L-lathes to the MDF.
The wheels have 125 mm diameter being 1 mobile and 2 fixed peces + 1 x brake.

HERCULES Tool carriage



Modular work bench



Tool charging station



Tool chest Eurovision



Wardrobe cabinet, 9 compartments



Tool box

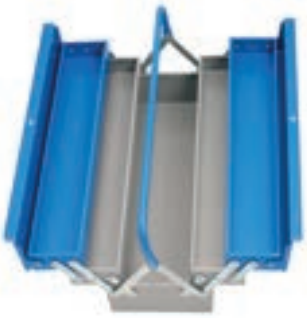

Heavy duty tool chest



Tool case



Display panel



Unit badged laminated beechwood.
Tactical Gear Stand , weather proofed to store body armor Kevlar hermet.
Complete assambly custom made.





COLLAPSIBLE WARDROBE



Collapsible two- door front opening wardrobe with flat panel doors and an inner shelf. Solid wood construction withnon-rusting/non-corrosive metal hinges, hanging rod, handles,and fittings.

Dimensions: 72”HX36”WX24”D (183cm);
Height/Hoehe X 90cm Width/Breite X 60cm Depth/Tiefe);
The maximum weight for these wardrobes is 110 lbs./50 kg;



Wardrobe



Locker room with partition wall





Locker room with long door





Locker room with door Z





Locker room with short door

-Steel sheet welded stable structure;
-Ventilation slots and nominal label holder;
-2 keys safety lock;
-Closed shoe compartment;
-The wardrobe is fitted with an ABS-folding;
-Laminated top sliding bench;
-Electrostatic paint/spraying, standard RAL 7035 light gray color;



Having the workflow data collected, you can track its performance, or ask us to do it for you. Not only that, but we can provide you with regular reports detailing how much carbon you have saved compared to a conventional alternative.

Solar Lighting Tower does not need refuelling and it's digital, in-built, remote control function means you can alter it's setting as required to suit the light conditions without the need to attend the light on site.



Mobile 360 Degree Beam Angle Light Tower Ritelite K45

POWER PRODUCTS FROM 50 KVA TO 400 KVA



GZ50-OPEN VERSION

THREE PHASE SPECIFICATIONS

50 HZ - 400 - 230 V SPECIFICATIONS				GENERAL SPECIFICATIONS				
Generating sets[1]	kVA Cos ϕ 0.8		rpm	Engine			Open version	
	PRP [3]	ESP[4]		Engine type	Cyl	Cyl (L)	Dimensions lxwxh (m)	Weight[5] (kg)
GZ50	-	50	1500	GMC850	8V	5.3	2.20x1.04x1.17	786
GZ60	-	59	1500	GMC857	8V	5.7	2.20x1.04x1.17	786
GZ80	-	87	1500	GMC857I	8V	5.7	2.80x1.12x1.38	1271
GZ100	-	92	1500	GMC857TIC	8V	5.7	2.80x1.12x1.38	1271
GZ125	-	127	1500	PSI08T	8V	8.7	2.80x1.12x1.54	1293
GZ150	-	146	1500	PSI48TIC	8V	8.7	2.80x1.12x1.54	1554
GZ160	160	176	1500	D111TIC-176	6V	11.0	3.58x1.35x1.85	2258
GZ200	196	216	1500	D111TIC-196	6V	11.0	3.58x1.35x1.85	2258
GZ250	250	275	1500	D146TIC	8V	14.6	3.50x1.75x2.00	2942
GZ300	300	330	1500	D183TIC-273	10V	18.3	3.47x1.68x2.38	3523
GZ350	318	350	1500	D183TIC-319	10V	18.3	3.47x1.68x2.38	3523
GZ400	345	380	1500	D219TIC	12V	21.9	3.90x1.95x2.38	3868

(1) Only available in 400/230 V
(2) The dimensions and weights apply to a generating set specified in the price list, without options
(3) PRP: Main power available continuously under variable load for an unlimited number of hours annually, in accordance with ISO 8528-1
(4) ESP: Standby power available for emergency use under variable load, in accordance with ISO 8528-1: no overload availableunder this service.
(5) Dry weight - without fuel

GZ200-OPEN VERSION



GENERATORS

Offering advanced control, a monitoring system and a diagnostic system or optimized performance.

GZ125 -SOUNDPROOFED VERSION





GZ60 -SOUNDPROOFED VERSION

GENERATING SETS DESIGNED

THREE PHASE SPECIFICATIONS

GENERATING SETS	STANDARD ENCLOSURE			NATURAL GAS CONSUMPTION (M3/H)				50 HZ SOUND LEVELS		
50 Hz	Enclosure	Dimensions (mm) (m)	Weight (kg)	110% load	100% load	75% load	50% load	LWA	dB(A)@1m	dB(A)@7m
GZ60	SSE25-60	2.59x1.08x1.51	1100	17	16	13	10.3	92	73	62
GZ80	SSE25-60	2.59x1.08x1.51	1100	18.1	17.5	15	21	92	73	62
GZ80	SSE80-150	3.53x1.15x1.72	1518	29.7	28	23	18.5	92	75	64
GZ100	SSE80-150	3.53x1.15x1.72	1539	34.2	32	26	20.5	94	76	65
GZ125	SSE80-150	3.53x1.15x1.72	1732	35.6	33	26	20.5	100	81	70
GZ150	SSE80-150	3.53x1.15x1.72	1863	46.4	43	34	24.2	100	81	70
GZ180	SSE180-200	4.35x1.39x2.10	3064	48.3	43.6	34	23.7	99	79	68
GZ200	SSE180-200	4.35x1.39x2.10	3213	53.5	48.3	37	25.9	99	79	68
GZ250	SSE250	4.35x1.39x2.10	3711	70.4	36.8	49	34.2	95	75	64
GZ300	SSE300-350	6.31x2.23x2.86	5926	83.9	76.1	58	41.6	95	75	64
GZ350	SSE300-350	6.31x2.23x2.86	5926	88.1	79.9	60	46.8	96	75	64
GZ400	SSE400	7.23x2.43x2.86	6429	107.1	97	74	51.9	96	76	65

A simple modification to the control unit enables generating sets to be run on LPG.

ENERGY SOLUTIONS



TO MEET ALL NEEDS OF THE PROFESSIONAL MARKET



SAFETY AND QUALITY

The innovative structure of Portable Power generating sets is fitted with ergonomic handles to facilitate transport and ingenious mounts which ensure stability in the most trying of circumstances.
By reducing vibrations in the equipment, the stable mounts also optimize its service life.

To create conditions which allow customers to make informed choices, professionals from the generating set (<10 KW) and electrical welding equipment industries have collectively decided to commit to the Qualigen charter, guaranteeing the respect of current European regulations and existing standards, particularly with regard to the following points:

User safety,
Sales information,
Sound level,
After Sales Service
Electrical consumption.

LIGHT TOWER ATLAS COPCO Hilight H5



Atlas Copco HiLight H5+ Features

0.5l/h Fuel Consumption
5.000 Light Coverage M2
(average 20 luxes)
Extra Safety Features -
Hydraulic Vertical Mast
Lamp Durability/
Life Expectancy - LED 30.000 Hrs
Transport Efficiency - 10 units
to a 13m Truck 185
Running hrs
400 Service Interval hrs

Description:
Light Coverage m2: 5.000 (average of 20 luxes)
Lamps LED: 4x350W
Mast Vertical: Hydraulic
Features Galvanized Canopy
Engine: Hatz 1 B 50
Fuel Tank Capacity: 120l
Fuel Autonomy: 185hrs
The HiLight H5+ is the most efficient and compact trailermounted (hydraulic mast) light tower.

The H5+ offers best in-class fuel consumption, allowing longer run times between refuelling as well as long service intervals. Transport efficiency is also guaranteed as you can fit up to 10 units on a standard 13 meters truck.

The 4 LED lamps of 350W each, provide the best luminosity in the most efficient way. The HiLight H5+ offers all that general construction applications requires.

LIGHTING SOLUTIONS



The HiLight range of light towers were designed to offer the widest choice when it comes to finding the light tower that is right for your application.
We provide a wide range of industries with a flexible and dynamic set of lighting options, while addressing all aspects of efficiency and safety.
You can also be assured of the robust build quality and compact size for which Atlas Copco is globally recognized.

Atlas Copco have really put their innovation stamp on LED technology.
The lenses in our LED light towers have a very special optic designed specifically for construction and mining applications.

This innovative, fully directional, LED lens design means, we maximize the light coverage and reduce "lighting waste".
A single HiLight tower can cover an area of up to 5.000 m2 with a 20 lux (brightness) average –ensuring a brighter, safer and more productive site.



The Porta cool Jetstream Portable Evaporative Coolers keeps work areas cool and comfortable.
This evaporative cooler features greater airflow and a unique product design that provides maximum cooling comfort.



Features:
- Kul Comfort evaporative media set;
-Large drain for easy and effective maintenance;
- Liquid Level Indicator with automatic pump shutoff;



HEATING,VENTILATION, AIR CONDITIONING





FIRE - MOBILE INFRARED HOT AIR GENERATORS

- Direct heat flow without air movement;
- Low noise level;
- Dedicated BM2 burner with standard EU components ;
- Diesel fuel pump with gears;
- Electronic flame control with photoresistor;
- Possibility of interface with thermostat, humidistat or timer;
- Power supply cable (1.5 m) with plug;
- Combustion chamber in AISI 430 stainless steel;
- Cooling of the outer casing by supplying air over the entire surface of the cone;
- External structure in double sheet steel for thermo-acoustic insulation;
- Timed post-ventilation for cooling the combustion chamber;
- Fuel pipes in hydrocarbon resistant rubber with metal coating;
- Shockproof polyethylene tank;
- Screw closing cap for diesel fuel tank;
- Diesel fuel drain plug;
- Adjustability of the diffuser cone with locking;
- Lifting hooks;

GE - DIRECT COMBUSTION MOBILE HOT AIR GENERATORS









- Integrated oil burner;
- Electric flame control;
- Overheating thermostat;
- Socket for connection to thermostat, humidistat or timer;
- Power supply cable (1.5 m) with plug;
- Combustion chamber in AISI 430 stainless steel;
- Timed post-fan for cooling the combustion chamber;
- Fuel pipes in hydrocarbon-resistant rubber with textile;
(GE 20, GE 36, GE 46), methylated (GE 65, GE 105) mesh lining;
- Shockproof polyethylene tank (GE 36, GE 46) in steel (GE 20, GE 65, GE 105);
- Bayonet tank closing cap;
- Fuel drain plug from the tank;
- Electric control panel;

TITAN - HIGH FLOW INDIRECT COMBUSTION HOT AIR GENERATORS WITH CENTRIFUGAL FAN

- Burner cover drawer that allows protection from shocks, dust, water, atmospheric events and diesel / condensate collection tank;
- Burner equipped with snorkel socket to ensure clean combustion air by connecting it to the suction sheath from the outside;
- The new heat exchanger combined with the new higher performance fans allow to obtain a thermal efficiency of 96%;

- Better anchoring of the machine supporting structure thanks to sturdy fixing brackets that allow it to be moved on any surface;
- Supporting structure with removable panels for internal washing, even when the machine is hung;
- Panels with cross reinforcement folds to ensure greater rigidity and strength;
- Use only metric screws and inserts for fixing, no self-tapping screws;
- Combustion chamber smoke exhaust protection in plastic material with retention chains;

Fan protection (IP 55):

- Very quiet (noise 69 db at 2 meters);
- High head and performance that guarantees a high air flow rate and static pressure (500 Pa) for the homogeneous and long distance diffusion of hot air through ducts or sheaths;
- Fan anchored to the supporting structure by means of sturdy side members and fixing brackets;
- Adjustable fresh air recovery damper;



Rear electrical control panel (IP 65):

- Positioned at the rear, it prevents it from coming into contact with dust, water, snow, etc;
- Equipped with a sturdy metal cover that also allows the storage of tools and documents;



Front electric service panel (IP 65):

- Positioned in the front part of the machine inside the burner cover drawer: to prevent it from coming into contact with dust, water, snow for easier maintenance for easier control and operator intervention;

Each main component (fan, burner, thermostats, etc.) is equipped with quick electrical connection connections:

- Speed of assembly / disassembly and technical intervention;
- Elimination of installation / disassembly errors;

INDUSTRIAL HEATERS





-Base for handling by forking;
-Front protective casing with door equipped with lock for burner cover
-Rear casing to protect the centrifugal fan with lateral air intake / return connection;
-Protective base for the upper part with hooks for lifting / fixing;
-Central lifting hook;
-Removable panels for internal washing with cross reinforcement folds to ensure greater rigidity and strength;
-Use only metric screws and inserts for fixing, no self-tapping screws
-The new heat exchanger combined with the new higher performance fans allow to obtain a thermal efficiency of 96%;

Fan protection (IP 55):

- Very quiet (noise < 69 db at 2 meters);
- High head and performance that guarantees a high air flow rate and static pressure (500 Pa) for the homogeneous and long distance diffusion of hot air through ducts or sheaths;
- Fan anchored to the supporting structure by means of sturdy side members and fixing brackets;
- Adjustable fresh air recovery damper;

Rear electrical control panel (IP 65):

- Positioned in the rear, it avoids contact with dust, water, snow, etc;
- Equipped with a sturdy metal cover that also allows the storage of tools and documents;

Front electric service panel (IP 65):

- positioned in the front part of the machine inside the burner cover drawer:to prevent it from coming into contact with dust, water, snow for easier maintenance;
- a for easier control and operator intervention;

EK - ELECTRIC CURRENT MOBILE HOT AIR GENERATORS



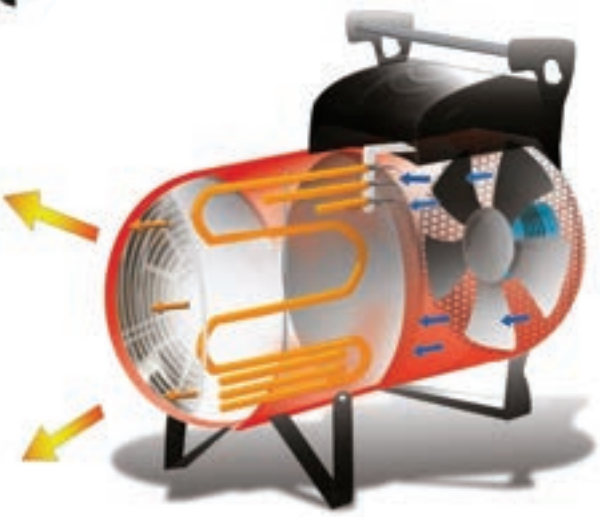

-AISI 321 armored electric resistances wound with high heat exchange profile
-Built-in room thermostat
-Power selector
-Power supply cable (1.5 m) with plug (EK 3)
-Manual reset safety thermostat
-Front grill in stainless steel
-Ductable up to 6 m (EK 10, EK 15, EK 22, EK 30)
-Possibility of stacking
-External thermostat socket (EK 30)

FJ - AXIAL FANS

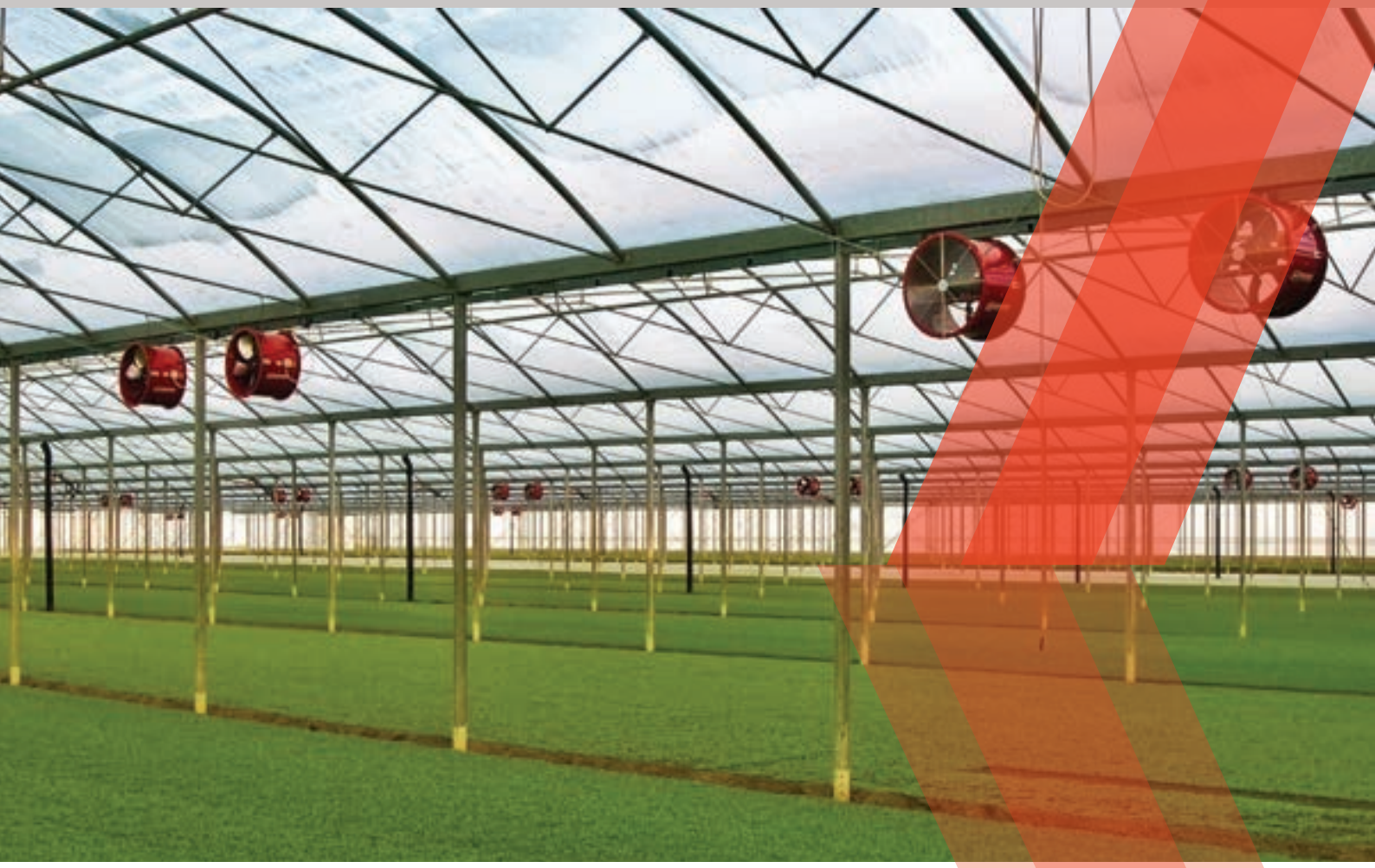



- Internal and external structure in stainless steel
- IP 55 motor with thermal protection
- Three-blade aluminum fan
- Suspension hooks
- Double protection net (motor side and fan side)
- Air flow rectifiers

CONFORT - PLUG & PLAY INDUSTRIL HOT AIR GENERATORS WITH INDIRECT COMBUSTION



- Compliant with the Erp 2018 regulation;
- Separate automatic oil burner;
- Electronic flame control;
- Built-in electronic room thermostat (0 ° / + 40 ° C);
- Centrifugal fan;
- FAN-LIMIT bi-thermostat with automatic reset;
- Manual reset safety thermostat;
- Power supply cable with plug;
- Integrated diesel tank for autonomy> 16 hours;
- Integrated fuel reserve level indicator;
- External structure in double sheet steel for thermo-acoustic insulation;
- Aerodynamic combustion chamber in high-performance stainless steel;
- Pre-heating and post-ventilation for cooling the combustion chamber;





HEATING,VENTILATION, AIR CONDITIONING









Burner equipped with snorkel socket to ensure clean combustion air by connecting it to the air intake sheath to the outside;

The new heat exchanger combined with the new higher performance fans allow to obtain a thermal efficiency of 92-93%;

Pre-heating and post-ventilation of the combustion chamber;

Panels with cross reinforcement folds to ensure greater rigidity and strength (SP 110-235);

Thermostats: FAN for fan control; LIMIT for burner control;

OVERHEATING safety thermostat in case of overheating with manual reset;

Supporting structure with removable panels for internal washing, even when the machine is hung;

Use only metric screws and inserts for fixing, no self-tapping screws;

Fan protection (IP 55):

- very quiet (noise â‰¤ 69 db at 2 meters);
- with high head and performance that guarantees a high air flow rate and static pressure (500 Pa) for the homogeneous and long-distance diffusion of hot air through ducts or sheaths;
- fan anchored to the supporting structure by means of sturdy side members and fixing brackets;
- adjustable fresh air restore damper (SP 110-235);

Electric control panel (IP 65):

- connectable to thermostat / humidistat / timer;
- embedded in the lower part;

INDUSTRIAL FANS

Bluemax 950



Specification

- 35" (900mm) fully enclosed 5 blade impellor
- 1.5 kw 230V / 110V Motor
- Air output 20,000 cfm (37,000 m /hr)
- High impact twin wall Polyethylene resin body
- Fine mesh grills complete with convenient grab handles
- Large rubber fixed wheels with swivel casters
- Weight 85kg
- Dimensions (H x W x D) 1170mm x 1050mm x 440mm

The Bluemax 950 Fan was developed in 2004 due to demand for a large mobile air mover. It's the largest free standing industrial fan on the market which quite simply blows the competition away!
With its massive air flow performance and manoeuvrability its prime application is to operate in environments, where large volumes of air is required.
As well as the mainstream market, the Bluemax 950 has found itself servicing many niche sectors from rental to agricultural simply because of its performance.

Besides offering a cooling solution, the Bluemax 950 doubles up as an extractor fan for use in warehouses, factories, bakeries, mills, foundries and many more applications where its performance is needed to disperse the excess amounts of fumes, dust, water vapour and other unwanted materials.

This popular, robust air mover is easily manoeuvred to assist in applications where large volums of air requires circulating maintaining a comfortable working atmosphere.

The Bluemax 950 gives out an impressive 20,000CFM (37,000 m^2/ hr) and is available in either 110V or 230V supply.
We recently embarked on a 3 phase installed version which is proving to be very successful within a bespoke application.

The unique composite twin wall polypropylene body is mounted on pitched base for maximum long distance effect. With its fine mesh grills and large rubber wheels for manoeuvrability the fan is ideal for use in and around public areas.

Bluemax 650

HEATING AND COOLING

Specification

- 560mm diameter fully enclosed 5 blade impellor
- Air output 8,500 cfm (15,700m /hr)
- High impact twin wall Polypropylene body
- Fine mesh grills complete with convenient grab handle
- Rubber fixed wheels with swivel casters
- Weight 30kg
- Dimensions (H x W x D) 950mm x 800mm x 430mm

The Bluemax 650 offers a welcome addition to the Bluemax range. Noticeably smaller than its counterpart the 650 appeals to a much wider audience due to it being fitted a variable speed control unit, allowing users to accurately control the air output according to the application and environment.



Half automatic vertical band saw machine

FMB MAJOR 3 Phase 400 V



- stepless adjustable from 16 to120 m/min
- heavy - duty undercarriage
- hydraulic adjustable saw feed
- cooling pump 0.08 kW
- saw fracture protection
- system to operate by hand (code “M”) mnual.
- engine protection
- cleaning nozzle
- voltage 400V (CE certified) 3 phase
- saw speed 16-120 m/min step less
- engine power 1.5 KW
- dimension saw blade 3300 x 27 x 0.9 mm



Column Drill
(mechanical clutch
/automatic feeding)



Milling machine CS -G4 50B
F /RTW /RTH Chung Sing
Machinery CO., LDT

Lathe ECOCA SJ 560 X 1500G



- 2 fixet center points
- 1 reduction for the fixed center point in the head axle
-3 jaw scroll chuck
- 4 jaw scroll chuck
- digital readouts
- face plate
- fixed support
- cooling system
- 4 post cutting chisel
- automatic feeding stop
- light on the machine
- micro turn on
- protection cover on the back
- brake engine



Precision Band Saw
METABO XXL BAS 505

Belt grinder HM TAS 150X

- with extraction
-abrasive belt -150 x2000 mm
-motor brakes as standard
-simple and practical operation
-easy machine adjustment
-quick belt or wheel change
-3 x 400V 3 Phase
-4.8 HP
-belt speed 35m/sec
-grinding surface 620 mm
-work height 475 - 1240 mm
- CE certified EG - declarationconformy 2006/42/EG
-2 speed engine



Revolution Milling Machine Motor 400V





- table size: 1100x900mm
- milling opening: 350mm
- maximum spacing: 275mm
- adjustable: 45 -90
- speed: 3000/4000/5000/6000/8000/10000 RPM
- maximum height: 160mm

Standard features:

- induction motor cooled with very strong aluminum
- stable steel column
- keyless footrest
- tool holder
- cast iron power handle
- cooling system

Stock Feeder Motor 400V



Radial Saw Motor



EQUIPMENT

Panel Saw Harvey Nano

Main blade with standard diameter of 315 mm;

T-6 aluminum alloy sliding table;

Electronic adjustment of the blade tilt angle using the digital device;

Adjusting the electronic height of the blade (up/down);

The glider of the revolution and the combine





Table Saw 220V / 50 hz





Portable Table Saw with 6" blade and integrated Stand 220V/ 50 HZ





Drill Press 220V /50 HZ

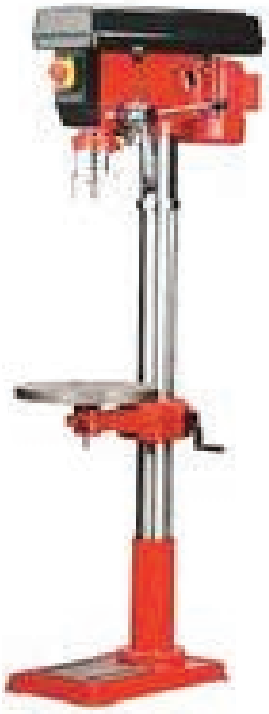

Large Standup Drill Press 220 V/50 HZ



Belt and Disc Sander 220V/ 50 HZ

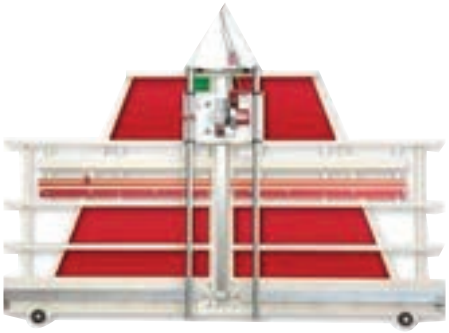

Vertical Panel Saw 220V / 50 HZ



Scroll Saw (Table width >12")
220V/ 50 HZ



Standup Band Saw
220V/50 HZ

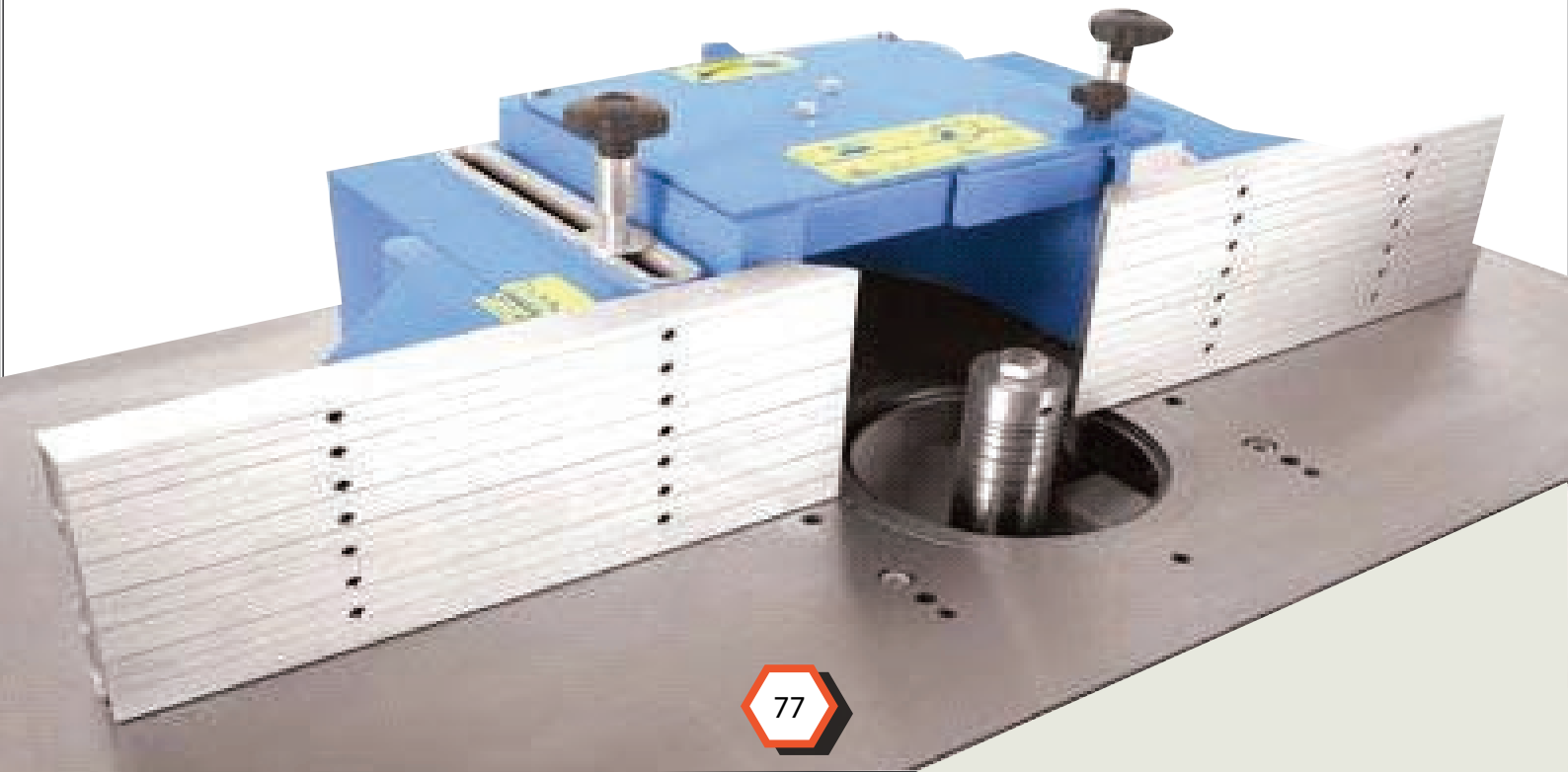

Band saw for metals with 260 mm vertical square section cutting capacity and 220 mm round section. Powered with single-phase or three-phased motor.



Maximum cutting capacity at 0°- 220 mm
(round section) -260 x210 mm (square section)
Maximum cutting capacity at 45°-150 mm
(round section) - 145x145 mm (square section)
Maximum cutting capacity at 60°- 90 mm
(round section) - 85 x85 mm (square section)

Belt speed with three-phase motor
- 65 -78 meters / minute
Belt speed with single- phase motor
- 65 meters / minute
Maximum vise opening -260 mm
Goniometer for angled cuts - included
Cooling pump - included

ENGINE
Power - 1.1 KW
Type -Single- phase (1 speed) / Three- phase on request (2 speeds)
Motor protection - included

ACCESSORIES UPON REQUEST
Bi- metal blade GEO4023 12MM, SV. 2460
Bi-metal blade GEO4023 27MM, SV. 2460

Lathe with distance between centers of 2000mm, DRO digital display of quotas, white watercooling pump, maximum diameter to work on the bench of 560mm, 12 speeds of the three-phase motor spindle of 10 hp overall dimension.



Neck size (lathe in box) -3400 mm (length) x 1150 mm (width) x 1750 mm (height)
Dimension with base - 3330 mm (lenght) x 1180 mm (width) x 1740 mm (height)
Net weight of the machine - 2770 kg
Gross neck wight (lathe in case) -3090 kg

LATHE SPECIFICATIONS
- spindle diameter -250 mm
- distance between the tips - 2000 mm
- bar / spindle passage - 80 mm
- maximum standart turret tools -25mm
- maximum turning diameter on guides - 460 mm
- maximum turning diameter on cross slide-270 mm
- tailstock vice cone -MT4
- tailstock diameter - 130 mm
- tailstock sleeve ride -135 mm
- turret slide run- 125mm
- cross travel -290 mm
- spindle rotation speed adjustments - N. 12
- spindle connection - D1-8

Lathe with distance betwen centers of 2000 mm, DRO digital display of quotas, white water cooling pump, maximum diameter to work on the bench of 560 mm, 12 speeds of the three-phase motor spindle of 10 hp overall dimension.





Neck size (lathe in box) - 3400 mm (length) x 1150mm (width) x 1750 mm (height)
Dimensions with base - 330 mm (length) x 1180 mm (width) x 1740 mm (height)
Net weight of the machine - 2770 kg
Gross neck weight (lathe in case) - 3090 kg

LATHE SPECIFICATIONS

Spindle diameter - 250 mm
Distance between the tips - 2000 mm
Bar /spindle passage - 80 mm
Maximum standard turret tools - 25 mm
Maximum turning diameter on guides - 460 mm
Maximum turning diameter on cross slide - 270 mm
Tailstock vice cone - MT4
Tailstock diameter - 130 mm
Tailstock sleeve ride - 135 mm
Turret slide run - 125 mm
Cross travel - 290 mm
Spindle rotation speed adjustments - N. 12
Spindle connection - D 1-8

Milling machine FR - 80
Maximum drilling capacity - Ø 50 mm
Maximum candle milling capacity - Ø 40 mm
Maximum insert milling capacity - Ø 120 mm
Travel axis X-Y-Z- 850 - 380 - 400 mm

Stem stroke - 127 mm
Spindle connection - ISO 40 mm
Distance of the madnrino axis - column - 100 - 650 mm
Vertical / horizontal spindle speed 80 - 4000/40 - 300 rpm
Number of vertical / horizontal spindle speeds - 8/12 Vertical tilting head +/- 45°
Vertical head rotation around its axis +/- 90°Table diensions - 1270 x 254 mm

Maximum spindle - table distance - 90 - 490 mm
Slot width T - 14 mm
Automatic advancement -0.04 - 0.08 - 0.15 mm / rev
Vertical / horizontal spindle motor power 2.2 kW - 750
Power supply - 400 V -50 Hz
Weight - 1650 kg

Saw with tilting top, cast iron flywheels of 500 mm in diameter, maximum cutting height of 300 mm and single - phase 3 horse power Motor (on request available in three - phase version) overall dimension.

Overall dimensions of the machine - 1060 mm (width) x 860 mm (depth) x 1860 mm (height)
Net weight of the machine - 320 kg
Gross weight (machine in packaging) - 360 kg



BRAND SAW SPECIFICATIONS
Support plane - 770 mm (width) x 500 mm (depth)
Type of support surface - Cast iron - Tiltable from 0 - 21
Diameter Flywheel - 500 mm
Horizontal distance between the blade and
the flywheel spport - 490 mm
Maximum vertical cutting height - 280 mm
Blade development - 3500 mm
Given blade width supplied - 25 mm
Maximum width mountable blade - 38 mm
Goniometer for angled cuts - Present as standart
Millimeter guide - Present as standard

ENGINE
Power - 3 Hp - 2200 W
Type - Single phase
Frequency - 50 Hz
Motor protection - Included



Professional bench stander with adjustable sliding abrasive belt on a cast iron support surface with dimensions of 900 x 300 mm powered by a 1500 w motor.

Overall dimensions -1600 (length) x 900 (width) x 1000 (height) mm
Machine net weight - 170 Kg

SPECIFICATIONS
Tape length - 2800 mm
Tape feed speed - 900 meters / minute
Tape width - 150 mm
Rollers diameter supplied - 40;51;80 mm
Height - 140 mm
Size of the fixed floor 900 x 300 mm
Suction mouth diameter - 100 mm

ENGINE
Power - 2200 W
Type - Single phase (3HP- 2200 W)

ACCESSORIES UPON REQUEST
Sanding belt SB1 08 80 grit
Sanding belt SB1 08 100 grit
Sanding belt SB1 08 120 grit



DVU P400 wire box digisteel /digiplus III Trolley II TBV digisteel /digiplus ;
Alukit DVU 1.0-1.2;
Freezcool 9,6 L;
Pressure reducer eurojet cap N INRO2 VP OUT M12x1R P200;
Torch LGS 505W - Water cooling - compatible with Binze Set of water- cooling hoses 10m universal ;
Giss electrical power connection Male 32Amp 5P 380V ;

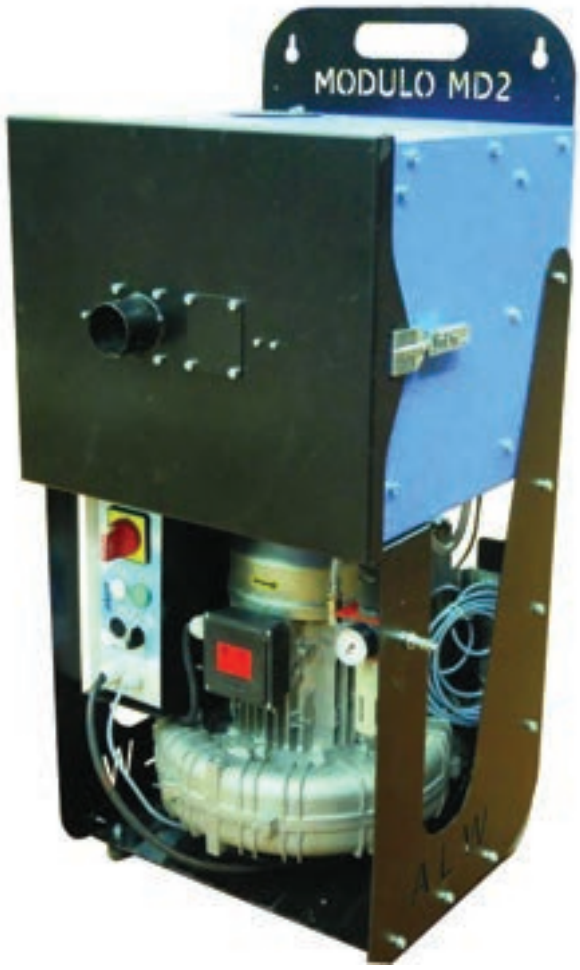



Cartridg polyester 327x250 5M2
Kit hose HV VAC DIAM 50LG 10M
Torch WST2 5W 3M
Torch WST2 5W 4M
Polyam Brassliner 1.0-1.2 3M



EASY TRUCK TROLLEY

Professional tools for handling wheels for trucks, trailers and busses.

Ideal for: TRUCKS /TRAILERS/ BUSSES

Easy and ergonomic handling of truck wheels.
Developed for safe and easy mounting and demounting of truck wheels.
Designed in order to reduce manual stressful operations and improve the ergonomic working environment.

CAPACITY

With a gripping range of ø 800 - ø 1250 mm (31 - 49”) and a lifting capacity of 130 kg (286 lbs), the Easy Truck Trolley can handle almost any tyre and wheel assembly for trucks, trailers and busses.



HYDRAULIC JACKS

Made by AC Hydraulic A/S.



Technical data:

65-1

Capacity:	65 t
Min. height:	245 mm
Max. height:	380 mm
Frame length:	825 mm
Handle length:	1160 mm
Width:	200 mm
Width (with wheels):	380 mm
Air supply:	9-10 bar
Air consumption:	350 l/min
Weight:	95 kg

Capacity: 65 ton - Max. height: 725 mm

- Minimum height of 425 mm;
- Maximum height of 725 mm and with extensions up to 1025 mm;
- Designed for heavy-duty, intensive commercial use;
- Hard chromium plated ram for long life;
- Built-in safety overload valve;
- Hand-operated dead-man's control for optimum safety whilst lifting and lowering;
- Ergonomic handle with push buttons;
- With 2 extensions (100/200 mm);



Technical data:

65-1H

Capacity:	65 t
Min. height:	425 mm
Max. height:	725 mm
Frame length:	980 mm
Handle length:	1160 mm
Width:	300 mm
Width (with wheels):	380 mm
Air supply:	9-10 bar
Air consumption:	350 l/min
Weight:	138 kg



CAPACITY: 100 / 150 ton - Max. height: 595 mm

- All steel, heavy duty chassis build to fit harsh environment
- Large rubber tires allow easy positioning on challenging surfaces;
- Innovative chassis construction facilitates jack repair and even wheel changing on site;
- High ground clearance for clearing rail and rough terrain
- Multiple position handle for easy tilt back and ergonomic moving;
- Safety valve prevents overload;
- Handle with dead-man's control for optimum safety during lifting and lowering;
- 2 lifting eyes and tilt-back handle position for easy jack handling and transport;
- Can be supplied with extensions and locking rings (not standard);

Technical data:

	100-1L	150-1L
Capacity:	100 t	150 t
Min. height:	460 mm	460 mm
Max. height:	595 mm	595 mm
Frame length:	1300 mm	1300 mm
Handle length:	1360 mm	1360 mm
Width:	350 mm	350 mm
Width (with wheels):	625 mm	625 mm
Air supply:	8-12 bar	8-12 bar
Air consumption:	1200 l/min	1200 l/min
Ground clearence:	40 mm	40 mm
Weight:	355 kg	355 kg

CAPACITY: 100 / 150 ton - Max. height: 1120 mm



Technical data:

	100-1	150-1
Capacity:	100 t	150 t
Min. height:	720 mm	720 mm
Max. height:	1120 mm	1120 mm
Frame length:	1735 mm	1735 mm
Handle length:	1360 mm	1360 mm
Width:	575 mm	575 mm
Width (with wheels):	715 mm	715 mm
Air supply:	8-12 bar	8-12 bar
Air consumption:	1200 l/min	1200 l/min
Ground clearence:	95 mm	95 mm
Weight:	510 kg	510 kg



Technical data:

	100-1H	150-1H
C apacity:	100 t	150 t
Min. height:	970 mm	970 mm
Max. height:	1620 mm	1620 mm
Frame length:	1735 mm	1735 mm
Handle length:	1360 mm	1360 mm
Width:	575 mm	575 mm
Width (with wheels):	715 mm7	15 mm
Air supply:	8-12 bar	8-12 bar
Air consumption:	1200 l/min	1200 l/min
Ground clearence:	95 mm	95 mm
Weight:	576 kg	576 kg

EASY GRIPPER

Mounting, demounting, moving, tilting, and stacking of OTR, EM and AGRO tyres and wheels up to 8 ton – depending on the configuration, have been made a whole lot easier and safer with the Easy Gripper product range from Just Easy Tools.

Just Easy Tools specializes in optimizing tyre hadling processes - and has successfully delivered hydraulic tyre handler / tyre manipulator solutions to both Tyre Service, Tyre Manufacture, OEM, Ports, Mines, and Agricuture industry worldwide.
A wide product range of Easy Grippers are available, depending on the weight and size of the tyre to be handled, and the characteristics of the carrier.
The Easy Gripper require a carrier, such as a forklift, a front loader, a telehandler, or a truck crane.
Easy Gripper 1700





IDEAL FOR :
AVIATION / MILITARY / MINING / PORTS
OEM / WORKSHOPS / ASSEMBLY LINES
INDUSTRIAL TRUCKS
TYRE SERVICE

FEATURES:
UNIQUE 3-POINT GRIP
PRECISE ROTATION +/-25°
HORIZONTAL/VERTICAL TILT 90°
PRECISE SIDE SHIFT +/- 80 MM*
INTEGRATED CAMERA SYSTEM FOR OPTIMAL VIEW
PREVENT DAMAGE TO TYRES, RIMS & EQUIPMENT
EASY TO OPERATE

CAPACITY

With a gripping range from Ø480 - 1.700 mm(19-67”) and a lifting capacity of 600 kg (1.320 lbs) the Easy gripper1700 is developed to handle small and heavy OTR and AGRO tyre and wheel assemblies for the Aviation / Military Mining /Ports / Industrial / OEM industry.



ELECTRICAL STACKERS

Mounted on an electrical "walkie stacker" this Gripper is ideal for operating at assembly lines or in workshops with limited space.

Save time

Improve safety

STANDARD FEATURES

- Unique and safe 3-point grip;
-Avoid accidents;
- Avoid deformation and damages of tyres;
-Avoid damages to tyres, rims and equipment;
- Integrated camera system for optimal view;
- With automatic IR function in insufficient light conditions;
- Integrated Control System build in tiller;
- Tilt function 90°, horizontal to vertical;
- Precise rotation +/-25°;
- Slow drive mode;
- Controlled and accurate movements improve safety;

Turnkey solution

-The Easy Gripper 1700 can be delivered as a turnkey solution that include +/- 80 mm side shift and the control build in the tiller as standard features;

Optional accessories

- Quick Shift System

Easy hook on and off

-Shift between Gripper and forks in less than half a minute, by using the Fork Module and Hydraulic Multi Connection

- Easy shift of gripping pipes for various purposes;
- Flat top arm for limited tyre clearance;
- Customization on request;

EASY STACKERS

A wide product range of Easy Stackers are available, depending on the weight and size of the tyre to be handled, and the characteristics of the carrier.
The Easy Stacker require a stacker or a forklift as carrier.

Safe working environment

An Easy Stacker takes over most manual processes when lifting and moving tyres and wheels - which significantly reduces the load and the risk of injury to the operator.
With its unique and firm grip on the tyres, an Easy Stacker provides safe handling of the heavy tyres and wheels when these are to be picked up or placed in the warehouse.
The secure grip on the tires eliminates e.g. the risk of losing the tyres from the height.

Optimization of storage capacity

Due to the unique design and secure grip on the tyres, an Easy Stacker can place stacks of tyres very close together without the use of pallets or other systems that can "waste" space, resulting in optimal utilization of storage capacity.

Efficient unloading and loading of trailers etc.

Unloading and loading of trailers can be performed from one side of a trailer, due to the range of both Easy Stacker 1200 and Easy Stacker 1600.
Loading/unloading can be done by just one man and in less than one hour even including transport to or from the stock.

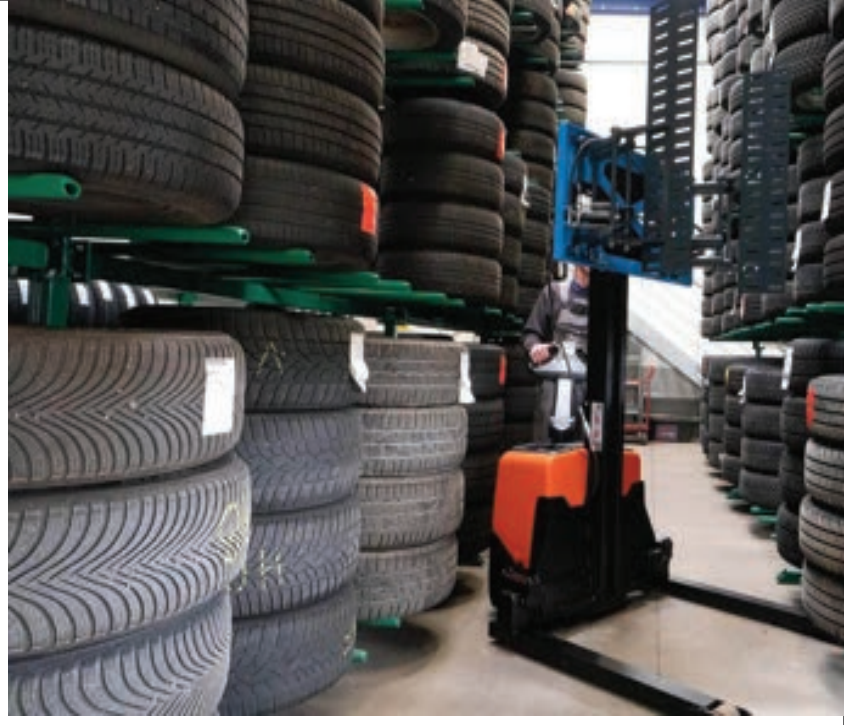





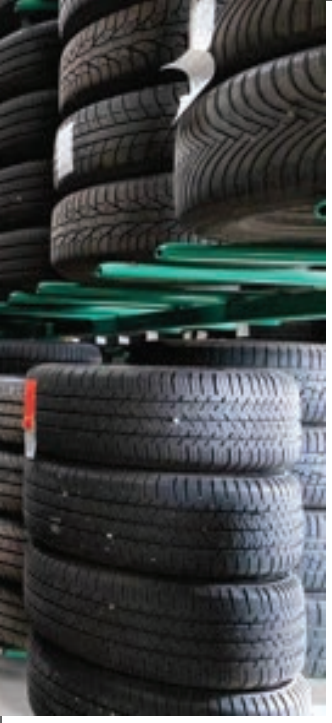

WORKSHOPS









EASY GRIPPER CRANE MODULE



Implementing the Easy Gripper makes tyre handling faster and safer, while preventing damage to tyres, rims and equipment.
Installed on a truck crane, the Easy Gripper offers the optimal flexibility allowing the driver to be able to both transport and mount the big OTR or AGRO tyres and wheels – and even single handedly.

Using the Gripper very risky and time-consuming handling situations become safe and easy.

CAPABILITY
With a gripping range of Ø850 - 2.400 mm (34 - 94") and a lifting capacity of 2 ton (4.400 lbs) at a CoG of 550 mm (22"), the Gripper can handle tyres up to 37.25R35.
When handling full wheel assemblies as inside duals, the Gripper can handles up to 24.00 R35 tyres.



If no bigger than 1 ton (2.200 lbs) wheel assemblies and a gripping range of Ø700 - 2.160 mm (28 - 85") are handled you can select our Easy Gripper 2160 configuration that can extend the gripping diameter to Ø2.400 mm (94") to handle even the biggest AGRO tyres, upon request.



WORKSHOPS







Mobile service of OTR/EM and AGRO tyres
The Easy Gripper product range is designed to help tyre professionals in a multitude of conditions and situations.



WHEEL TROLLEYS

We offering the following high quality wheel trolleys from AC Hydraulic A/S.



CAPACITY: 500 kg

- Flexible and ergonomic wheel trolley for the easy removal of wheels and brake drums;
- Adjustable lifting arms for wheel sizes Ø 270 – 1300 mm;
- Lifting arms with roller bearings for easy rotation of the wheel into correct position;
- Pedal operated pump leaving both hands free for working;
- Bracket for easy securing of the wheel whilst transporting;
- Hand operated dead man's release for optimum safety whilst lowering;
- Ideal for lifting brake drums, fuel tanks, tool boxes etc.
- 4 pcs of nylon castor wheels for optimum maneuverability;
- Shown with crane arm;



CAPACITY: 500 kg

- Flexible and ergonomic wheel trolley for the easy removal of wheels and brake drums;
- High lifting height (717 mm) makes it ideal for lifting e.g. wheels and brake drums off a transport wagon
- Adjustable lifting arms for wheel sizes Ø 270 – 1300 mm;
- Lifting arms with roller bearings for easy rotation of the wheel into correct position;
- Pedal operated pump leaving both hands free for working;
- Hand operated dead man's release for optimum safety whilst lowering;
- 4 pcs of polyurethane castor wheels for optimum maneuverability;
- Shown with crane arm;



CAPACITY: 1.500 kg

- Easy handling of large wheels;
-Two robust handles makes it easy to manoeuvre in the workshop;
- A simple switch makes expansion or retraction of the jaws very easy;
- A handle facilitates easy turning of the wheel on the trolley;
- The wheel can be secured with a ratchet strap for maximum safety;
- Wheel sizes: min. Ø 1000 mm - max Ø 2400 mm;
- Wheel width: max 1200 mm;
- Optimized packaging for ease of delivery and reduction of freight cost;
- WT1500N: without handle for turning the wheel;
- WT1500NT-B: equipped with 2 swivel castors with brake;



AUTOMATIC HOSE REELS

PRESSURE SPRAYERS - WASHING

This equipment is suitable for the nebulisation of low density lubricating oils, detergents, sterilizers, and so on.

Filled with liquid for 3/4 of their capacity and having air pumped inside at 6-8 bar it works automatically without any continuous link to compressed air.

The air-operated working at low pressure (max 0,5 bar) allows the brush washing with continuous flux or the washing of the items plunged directly into the liquid in the tank. The lid can be removed for better acces.



Polished steel pressure sprayer 50 l

WASHING COLLECTOR

Main purpose of this equipment is the washing of mechanical parts and items operation.
The air-operated working at low pressure (max 0,5 bar) allows the brush washing with continuous flux or the washing of the items plunged directly into the liquid in the tank.

48-52 litres of liquid detergent needs to be use for best result. The lid can be removed for better acces.

WARNING! Do not use inflammable or corrosive liquids or substances that emanate toxic vapors. Use exclusively specific chemical products for the washing of mechanical parts and only according to the regulations provided by the manufacturer.



Washing collector with wheeled tank 65 l

Hose reel fixed FOR AIR-WATER 20 bar Mod. F-400 WITH HOSE

Equipped with:
- Polyurethane blue hose 15 m - ø 8x12;
- Inlet-outlet F3/8"G - M1/4"G swiv;
- Nickel-plated brass connection;
- Swivelling joint 90° nickel-plated brass;
- Viton seals;





TYRE INFLATORS WITH AUTOMATIC CHARGING

Approved CEE tyre inflator 12 l with automatic charging

Tank capacity12 l
Approved gauge Ø 80 with scale 0-10 bar
1,20 mrubber hose with double clip-on connector



Equipped with:
Tank oil capacity10 l
4 mRILSAN spring hose
2 oil recovery basins1 l
with rubber hose and pipette 90°
1 filling funnel
standard plugs (mod. 1-4-6-9-18-25)

STAINLESS STEEL BRAKE BLEEDERS – CLUTCHES 2 – 3 CHAMBERS

EXHAUSTED OIL DRAIN UNITS

For the fall recovery of exhausted oil contained in the engine, the transmission and the differential of motor vehicles on the lift bridge.
The basin is equipped with a grate to support the substituted filters, and it can be regulated according to the height.

Warning: It is not possible to recover brake oils, fuels, inflammable and corrosive liquids.



Exhausted oil drain unit 90 l

Reference: 045-1460-000;
Exhausted oil drain unit 90 l;
Tank capacity 90 lwith level indicator;
Basin abs 3 sections tool holder;
Recovery basin capacity 20 l with ergonomic and swivel 360° abs funnel with breakwater grate for drip the substituted oil filters;
Pneumatic air emptying (max pressure 0,5 bar);



Exhausted oil drain unit 120 l

Reference: 045-1465-000;
Exhausted oil drain unit 120 l;
Tank capacity 120 l with level indicator;
Basin abs 3 sections tool holder;
Recovery basin capacity 20 l with ergonomic and swivel 360° abs funnel with breakwater grate for drip the substituted oil filters;
Pneumatic air emptying (max pressure 0,5 bar);



Wheeled exhausted oil drain unit suitable for barrels 180–220 l

More details: EQUIPPED WITH
- 1 x Trolley for 180-220 Kg barrels
- 1 x Threaded ring Ø 42 mm for pumps fastening
- 1 x 20 l Oil recovery basin

Trolley for 180-220 Kg barrels

Equipped with:
- 2 fixed wheels Ø250 mm
- 2 swivelling wheels Ø125 mm
- Base dimension 610x610 mm





DRAIN UNITS FOR GROUND

Exhausted oil wheeled floor drain units f suitable for the fall recovery of motor oils, transmissions and differential gears of lorries. The tank is equipped with breakwater and anti-reflux grate ideal for the support for drip the substituted oil filters.

The recovery exhausted oil can be transfered from the recovery basin to the socking tank through an emptying pump connected to the fixed system or directly mounted on the tank.

The new fully designed and pantented air-operated grease pumps, shows remarkable operating features. They are produced with fully electronic machine tools while being assembled with great care and having the parts carefully tested in order to assure the best guarantee of reliability for longer operatinf life.

It's materials and manufacturing quality control process makes these pumps suitable for work in the roughest environmental conditions.





Brand new, fully air-operated motion reverse device, without cams and springs;

Reduced number of wearing parts;

Big quantity of grease supplied at low air consumption;
High operating pressure ;

Aluminum alloy body pump with electrolytic treatment that ensures very high corrosion strength;
High stressed elements in Fe 420 steel;

Wheeled grease set suitable for drums 50–60 kg



18 -30 Kg



50 -220 Kg



50–60 kg



180 - 220 Kg



180 - 220 Kg

AIR OPERATED GREASE PUMPS

OIL DRAIN

Specifications:

- wheeled exhausted oil drain unit 120 l ;
-with emptying pump;
- tank capacity 120 l;
- breakwater grate on the base of the tank;
-breakwater grate for drip the substitued oil filters ;
-2 swivelling wheels Ø80 mm;
-2 fixed wheels Ø100 mm
-F 3/4" G exhaust ball valve;

Floor exhausted oil wheeled drains units suitable for the fall recovery of motor oils, transmission and differential gears of lorries.
The tank is equipped with breakwater and anti-reflux grate ideal for the support for drip the substituted oil filters.
The recovery exhausted oil can be transfer from the recovery basin to the tank of stocking through an emptying pump connected to the fix system or directly mounted on the tank.



It uses oil drain pressurized to transfer used fluids to a larger Hazmat storage tank.

Specifications:

- exhausted oil drain unit 90 l;
- tank capacity 90 with level indicator;
- basin abs 3 sections tool holder;
- recovery basin capacity 15 l without abs
ergonomic funnel with breakwater grate for drip the substituted oil filters;
- pneumatic air emptying (max pressure 0,5 bar);

For the fall recovery of exhausted oil contained in the engine, the transmission and the differential of motor vehicles on the lift bridge.

The basin is equipped with a grate to support the substituted filters, and it can be regulated according to the height.



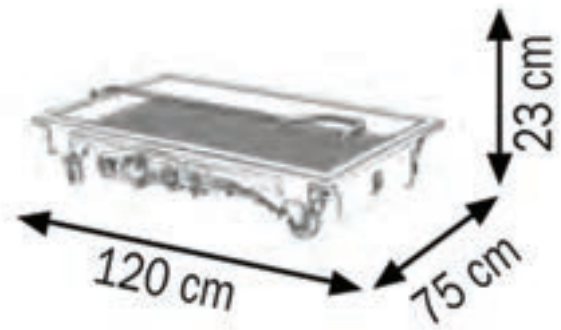

DIESEL FUEL TANK



REFUELING COMPARTMENT:

- Battery pump, nominal flow rate 40 L/min (option 60 L/min), equippment with battery cable and clamps or conector ;
-Digital fuel meter, mod. M24 (optional) and water absorbing filter (optional);
- Flexible rubber hose, length 5 m, complete with automatic fuel nozzle and nozzle holder;
- N. 1 set of rapid couplings for generator sets feeding (feeding + return line).
-Possibility to connect two gen sets contemporaneously (optinal second set of couplings);
- Mechanical level indicator ;

LOADING COMPARTMENT:

- Manhole, diam. O 300 mm complete with oil gasket and tight boltd cover;
- Loading access port provident with 3" quick cap;
- Three - effects safety and emergency valve- homologated;
- Emergency manual piston pump;
- Fire Extinguisher (optional);

MAIN FEATURES:

- Volume: 950 liters;
- Dimensions (WxLxH); 1.210x1.475x1.260mm;
- Empty weight: 640 Kg;
- Weight with pump and accessories: 662 Kg;
- Steel cover consisting of two independent lockable hinged lids gas pistons - operated;
- Top structural lifting lungs located in the corner supports;
- Forklift pockets on each side of the container;
-Dedicated anchorage points for basement fixing during transport;
- Possibility to connect/feed generator sets even with the cover closed and locked;
-Drainage pipe to empty completely the external container, provided with safety cap;













Battery electric pump for diesel fuel transfer 24V 45 l/min

Power cable 2,5 mmq 2 m long + clips ;
Self-priming rotary electric pump ;
Cast iron body ;
In-built by-pass valve;
DC engine;
Stainless stee filter 100 micron;
Motor protection rating: IP55

ELECTRIC PUMP FOR OILS AND LUBRICANTS TRANSFER

Electric pump for oils and lubricants transfer 12-24V-50Hz 45 l/min (12V) 60 l/min (24V)

Power cable 2,5 mmq 2 m long + clips ;
Self-priming rotary electric pump ;
Cast iron body ;
In-built by-pass valve ;
AC engine;
Stainless stee filter 100 micron ;
Motor protection rating: IP55 ;



DISPENSER FOR DIESEL FUEL TRANSFER



Transfer electric kit pump from tank 230V 100 l/min Wall mec 100

EQUIPPED WITH:

1 x Electric pump for diesel fuel transfer 230V-50Hz 100 l/min;
1 x Mechanical volumetric flow meter 3C min-max flow rate 20-120 l/min;
1 x Automatic nozzle PA120 for diesel fuel transfer;
1 x Antistatic rubber hose 10 bar for diesel fuel 4 m;

WORKSHOPS



If you want to store flammable and aggressive substances not only safely, but also regularly fill smaller quantities from the storage container, we recommend safety canisters with FALCON filling tap.

The practical stainless steel filling tap has a comfortable operating lever, which allows liquids to be dispensed into smaller vessels.
Removing the filling tap is not necessary for storage.
If required, filling operations can also be carried out directly from the storage position.
FALCON safety canisters with filling tap are delivered with a multilingual safety sticker for the content identification with hazardous symbols according to GHS.

IMMERSION CONTAINERS FOR PARTS CLEANING



Do you need a compact and mobile solution for small parts cleaning? FALCON immersion containers have ergonomic carrying handles, so they can always be transported to the place of use with ease.

With their rectangular basic shape you can effectivelyuse the space even on small work surfaces and can be stored in hazardous-substance cabinets to save space after use.
The container has an automatically closing lid, which protects the environment and employees in case of fire.
A removable parts basket made of stainless steel is included as standard.

STEEL OIL CAN WITH BRASS PUMP EXT, 0.3 LITRE VOLUME, 4 ITEMS



DESCRIPTION

- Sturdy metal housing;
- With stiff and flexible spout;
- With metal pump extension;
- For many applications, even for hard to reach areas;
- 1 pack = 4 pieces;

SPILL PALLET CLASSIC- LINE IN STEEL FOR 2 DRUMS, PAINTED, ACCESS, UNDERNEATH, WITH GRID, 1236 X 815 X 355



DESCRIPTION

-Special compact, space-saving design;
-Welded design in steel - safe and long lasting;
-Approved for storing flammable liquids (H224-226) and substances in all water-polluting classes;
-With certificate of compliance (ÜHP) valid across Germany, in accordance with building regulations list A, Part 1 of DIBt, Berlin and StaWa-R;
-Sealing test with material certificate;
-Corrosion protection with high-quality powder coating in gentian blue (RAL 5010);
-With optimised foot design for internal transport;
-Removable hot dip galvanised grids as a standing surface;





SPILL PALLET CLASSIC- LINE IN STEEL FOR 4 DRUMS, PAINTED, ACCESS, UNDERNEATH, WITH GRID, 1236 X 1210 X 290



SPILL TRAY FOR SMALL CONTAINERS CLASSIC-LINE, STEEL, PAINT, W GALVANIZED PERFORATED SHEET, 65 LITRE, 774 X 584 X 200

DESCRIPTION

-Optimum combination on Euro or chemical pallets;
-Store hazardous substances directly where they are needed;
-Stable plastic feet protect from corrosion and protect industrial and laboratory flooring;
-Can be stacked to save space;
-Welded design - safe and long lasting;
-In high quality powder coated steel for optimum corrosion protection;
-Approved for storing flammable liquids (H224-226) and substances in all water-polluting classes;
-Sealing test with material certificate;
-For direct storage of small containers;;



FIRE RESISTANT SAFETY CABINET G- 1201, YELLOW, INCLUDING 3 SHELVES, PERFORATED INSERT & SPILL TRAY

DESCRIPTION

-For the safe and legally compliant storage of flammable liquids with 90 minute fire protection in accordance with TRGS 510 (Appendix 3) and EN 14470-1;
-90 minute fire resistance according to DIN EN 14470-1;
-Tested in accordance with the requirements of the German equipment and product safety act (GS mark) and has CE conformity;
-Air extraction connection (NW 75) fitted in the roof of the cabinet;
-Integrated adjustment aids to easily level out the cabinets on uneven floors;
-Protection from unauthorised access;
-Inner surfaces have a highly chemical-resistant, impact and scratch-proof plastic coating, easy to clean;
-Earthing connection point on the cabinet roof;
-Doors close automatically in the event of a fire;
-Water-tight, tested spill pallet, powder coated sheet steel, incl perforated grid cover as additional storage level;
-Incl. 3 Shelves (height-adjustable in increments of 32 mm);
-High quality powder coating in safety yellow (RAL 1004);
-Easy to open, self-closing wing doors;
-Optional: door hold-open device for holding open the wing door In the event of a fire, the held door is closed automatically;



HAZMAT LOCKER PROTECT CS 102, WITH WIND DOORS, SUMP AND 1 SPILL TRAY



DESCRIPTION

-Safe, legally compliant storage of water-polluting, non-flammable liquids and toxic substances in workrooms in accordance with TRGS 510;
-Body in fine steel sheet with sturdy, quality paintwork, body gentian blue (RAL 5010), doors light grey (RAL 7035);
-Permanent air exchange via ventilation grid in the doors;
-Supplied ready assembled;
-Sturdy sheet steel design;
-Wing doors have a cylinder lock and covered locking bar;
-Full specification with spill trays;
-Height-adjustable spill trays;
-With 1 spill tray (height adjustable in increments of 25 mm) and tested spill pallet;

ASECOS LITHIUM -ION BATTERY STORAGE CABINET SAFESTORE, 3 SHELVES, W 1200 MM



DESCRIPTION:

-Storage cabinet for undamaged lithium-ion batteries (passive storage);
-All-round protection: 90 minute fire protection from the outside in (Type 90) in accordance with EN 14470-1;
-With tested, liquid-tight spill pallet (powder coated sheet steel);
-For containment of any leaks from burning batteries;
-With permanently self-closing doors and quality oil-damped door closers;
-Doors can be locked with profile cylinder (closing system compatible) and lock indicator (red/green);

-With adjustable feet to be used on uneven floor surfaces;
-Extremely robust construction with scratch-proof paint;
-Air extraction connection (NW 75) fitted in the roof of the cabinet;
-Integral base, accessible underneath, making it easy to change; location (base can be closed off by optional panel). However, in order to ensure rapid evacuation in an emergency, we recommend using the cabinet without the base panel;

-For the safe, passive storage of lithium-ion batteries;
-Over 90 minutes fire resistance for a fire acting from inside to out, in line with EN 1363-1;
-We recommend that SafeStore and SmartStore cabinets are delivered free to the place of use as part of the safety concept. We strongly recommend that the cabinets are sited at ground floor-level, so that evacuation can take place, quickly in the event of an incident. In addition we recommend that a maintenance agreement is signed for all cabinets with a fire suppression system.

DRUM TROLLEY, MODEL FKZ, PNEUMATIC WHEELS





DESCRIPTION

-For the transport and filling of 60 to 220 litre steel and plastic drums;
-With foot plate and belt for secure transportation and safe dispensing;
-Optimised, easy drum handling with much less effort;
-With pneumatic tyres;
-With robust powder coating in RAL 5010 (blue);
-Folding feet ensure stability;



DESCRIPTION

- Best option when larger quantities of hazardous materials need to be stored in a separate fire compartment and no clearance is available.
- Tested and approved as a complete system with 90 minute fire protection (F 90) from inside and outside.
- International designs meeting country-specific legislation (e.g. REI 120).
- Suitable for the storage, dispensing or removal of flammable and water-polluting substances.
- Install directly next to the external wall of neighbouring buildings or as a fire-rated separate area, e.g. in a production hall.
- On request available with variable shelf heights as well as in extra deep design.
- Tested, one-piece spill pallet with large containment volume.
- Storage surfaces fitted with removable, hot-dip galvanised grids and shelf guards on the rear wall.
- Long-lasting corrosion protection with the use of fully-galvanised base material and high-quality 2K paint. Fire protection panels (A class material, non-combustible) with high insulation properties.

- Door variants: long side with EI_2 90-C door to EN 13501-2, tested to EN 1634-1 or country-specific version. A door sequence controller ensures the doors close reliably. Door opening angle: 90 °, 102 °, 115 °, 128 °. Security lock for protection against unauthorised access.

- Points to consider when storing flammable materials: structural equipotential bonding by earthing the steel frame construction and technical ventilation.

- Accessible-underneath versions are installed on a separately-supplied concrete pad. This ensures easy access and loading using a high lift truck for example. For the wide version, the store is fitted with two concrete pads of the same size.



Structural analysis: to Eurocode 3(DIN EN 1993) measured for a characteristic wind load with a dynamic pressure of qw = 0.585 kN/m^2 and a characteristic ground snow load of sk = 2.5 kN/m^2;

Adequately dimensioned according to DIN 4149, EN 1998-1:2004 for earthquake zone 3.

Available with additional equipment for up to wind load zone 4, terrain category I (qw= 1.064 kN/m^2) and for up to ground snow load sk = 5.86 kN/m^2.

FIRE- RATED STORAGE CONTAINER RFP 115, COMPACT

DESCRIPTION



- The space saving solution for storage of hazardous materials near to production;
- Tested and approved as a complete system with 90 minute fire protection (F 90) from inside and outside. International designs meeting country-specific legislation (e.g. REI 120). Install directly next to the external wall of neighbouring buildings or as a fire-rated separate area, e.g. in a production hall;
- External cladding: galvanised components with two layers of paint give long lasting protection. Fire protection panels (A class material, non-combustible) with high insulation properties;
- Storage levels: if required, available with a variable number of fixed or removable shelves;
- Base: tested, single-piece spill pallet with easily removable hot-dip galvanised grids;
- Door: lockable, self-closing 1-wing fire-rated door EI 90 to EN 1350;



Structural analysis: to Eurocode 3 (DIN EN 1993) measured for a characteristic wind load with a dynamic pressure of qw = 0.585 kN/m^2 and a characteristic ground snow load of sk = 2.5 kN/m^2; adequately dimensioned according to DIN 4149, EN 1998-1:2004 for earthquake zone 3;

Available with additional equipment for up to wind load zone 4, terrain category I (qw= 1.064 kN/m^2) and for up to ground snow load sk = 5.86 kN/m^2;

HEAT CHAMBERS WK, 1 BAY





DESCRIPTION

- Constant substance preparation in fixed temperature ranges up to a maximum of 150°C (higher temperatures on request);
- Storage space for one up to 18 conventional IBCs or 4 to 72 x 205 litre drums;
- Heating with saturated steam, electrical energy, heat carrying oil or hot water;
- The systems are painted, galvanised or finished in stainless steel;
- Suitable for indoor and outdoor use;
- Various ATEX designs are available;
- If required, as GMP-compliant design or fully bespoke to your individual requirements.

INDUCTION HEATING UNIT WITH EXPLOSION PROTECTION Eex II T3, 230V

DESCRIPTION

- Instant heat in the drum wall, no time is lost
- Temperature increase depending on the liquid, approx. 10 -15°C per hour;
- Certified, automatic temperature limitation: max. 123°C (at the drum wall, at 20°C ambient temperature);
- Optional for manual temperature control (0-100%) :control box BF400 (order no. 168-039);
- The heating equipment is lifted over the drum with a lifting aid, e.g. the mobile lifter TLF - just one person is needed (order no 178-876);



- In combined with the induction drum base heater IBP (order no. 178-875) And GFK cover (order no. 178-877);
- A complete "mini-oven" is created for heating drums in EX zones;
- For steel drums up to 205 litres, for quickly heating viscous fluids;
- Ideal to liquidise solids;
- High performance and low energy usage - save time in production;
- Certified in accordance with ATEX for ex-zones 1 and 2: Ex II 2 GD / Ex e II T3;
- Protection category IP 66;

WORKSHOPS

LABORATORY SAMPLING & ANALYSIS ROOMS







The specialist systems designed by our experts offer complete safety for your employees and production.
DENIOS places a high value on their extensive customer consultations.
When handling dust and vapours hazardous to health, a technical solution is often required instead of personnel protection equipment (PPE). DENIOS integrates its certified extraction system perfectly into the mobile technical/safety rooms.

Dusts and vapours are extracted with targeted air extraction systems over a wide area.
The most modern air extraction filters permit emission-free air extraction.
Intake air is temperature controlled.

Additional points:

- Fire and explosion protection
- T90 doors with integral F90 glazing
- Alarm and warning lights
- Ergonomic working conditions
- Complete fitting-out of internal areas, e.g. with racking systems for storing retained samples, as well as PPE, emergency equipment and work equipment from our catalogue range.

SHELVING, RL 2250, STARTER MODULE





DESCRIPTION

- For the professional and individual storage of workshop materials, production accessories etc.;
- Flexible, sturdy storage system with push-fit, easy assembly;
- Galvanised frame;
- 4 galvanised shelves for storage;
- Sturdy construction with reinforcing crossbars;
- Shelving height can be adjusted in 25 mm increments;
- Can be expanded at any time;
- Delivered flat packed with instructions for easy self assembly;
- Basic shelf unit, can be individually extended with additional components;

PALLET RACK PO 33.37, BAY WIDTH 3300 MM, WITH 2 PAIRS OF TRANSVERSE MEMBERS, BASIC SHELF





MOBILE RACK,
BOTH SIDES WITH 128 OPEN-FRONTED
STORAGE BINS PRO-LINE A, HEIGHT =1160 MM

DESCRIPTION

- For organisation and quick access to small parts in the workplace;
- Delivery includes open-fronted storage bins DENIOS pro-line A in various sizes and colours;
- High storage volume in the smallest space;
- Bins are easy to remove to replace and refill;
- Sturdy frame in galvanised stee;l
- Supplied flat packed for self assembly, includes mounting equipment;

DESCRIPTION

- Pallet racks save space, reduce processing time, improve working practices and so increase productivity;
- Sturdy shelving system for all loading aids for example Euro or mesh box pallets;
- Ideal for efficient, orderly and adaptable pallet storage;
- Shelving frame galvanised, cross members powder coated red-orange (RAL 2001);
- Adjustable shelf height through hole distance of 50 mm;
- Can be expanded at any time;
- Shelving system designed, manufactured and tested in line with relevant standards and safety regulations;
- Delivered flat-pack, with instructions for assembly;
- Basic shelf unit, can be individually extended with additional components;
- Designed for storing 12 Euro or 6 chemical pallets;

WORKSHOPS

Overhead Door Kit, Power O perated, 230V



Door Sliding



ROLL - UP DOORS

Roll Up Door Frame



Steel door EI60 uniform lefthand reserve swing out





EYE WASHER







Eye washer with floor support

-the water flow is activated manually via pedal;
- water flow and low speed allow complete rinsing of the eyes and face ;
- ensures a flow of 11.5 liters of water / minute;
- ABS tank, galvanized steel pipe and fittings,vertical tubes covered with anti-corrosive green polyethylene;



Group: Eye washes , eye washers for emergencies, eye showers;
Code 81121

Eye washer in emergency situations according to EN 15154-1, EN 15154-2 CE ;





-Horizontal platform lenght -2500;
-Adjustable high-min. 800 mm-max. 1500 mm 2 pcs. hydro cylinders;
-Rubberised metal wheels;
-Front lip dimension 360 mm;
-Manual hydro pump ramps for raising and lowering;
-Side security boards;
-Replacement possible using forklift;
-Roadway- hot galvanized grate;
-Primed and painted frame;

RAMPS

Twisting fork outlet



Strong the wheels and axles



Strong construction



The crop sheet floor improves wheel grip

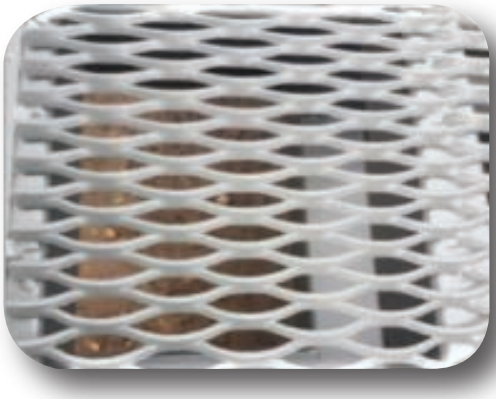

Ramp-lowering lever
with outside hydraulic control



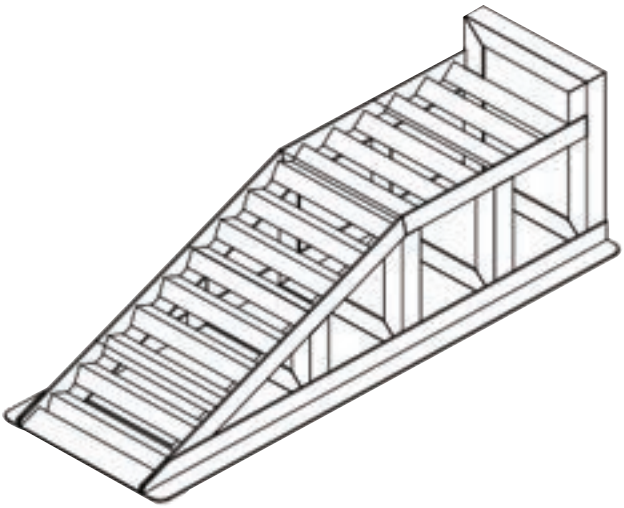

- Customizable dimensions upon request
- Default: 5 feet (L), 1.7 feet (W), 1.3 feet (H);
- Tire rampway of 1.3 feet width;
- Galvanized steel;
- Adjustable height with 2 inch increments;

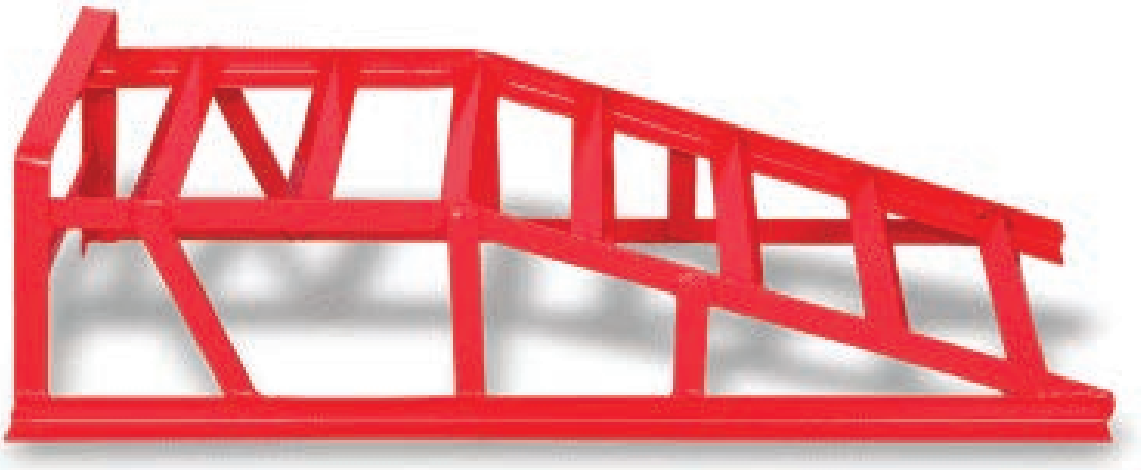

Heavy duty steel inspection ramps

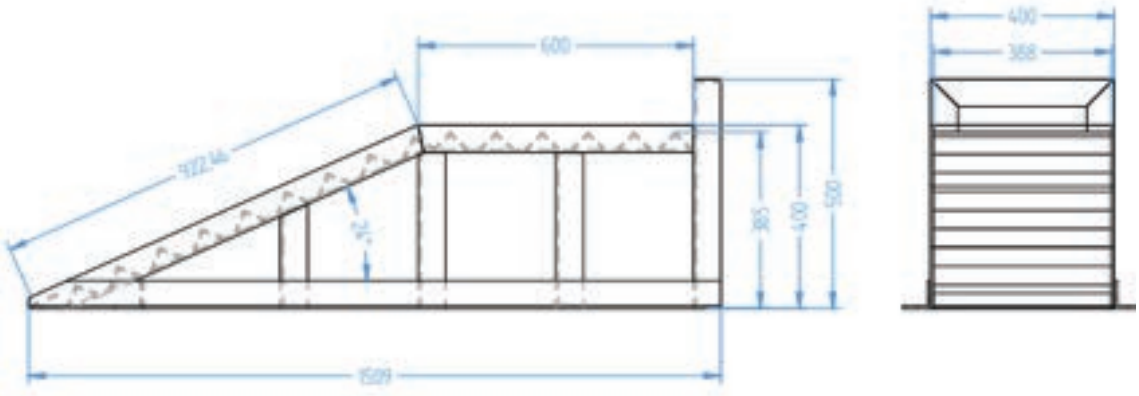

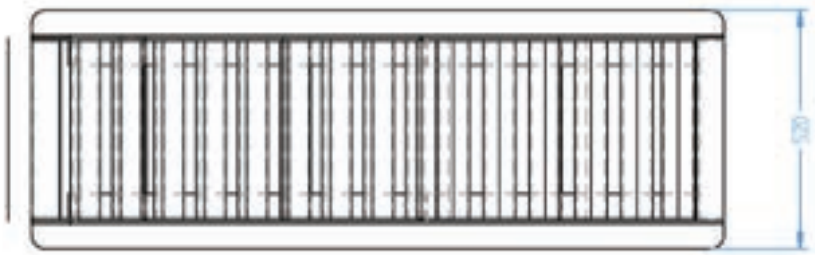

HEAVY DUTY ADJUSTABLE LOADING RAMP





DIMENSIONS AND CAPACITY FULLY CUSTOMISABLE UPON REQUEST













1. DESIGNED FOR HEAVY ARMOR
2. BUILT TO LAST AND SUSTAIN HEAVY LOADS
3. EASY TO DEPLOY AND HEIGHT ADJUSTABLE
4. VERSATILE OPEN DECK FOR MULTIPLE OPERATIONS
5. SUITABLE FOR RAILHEAD OPERATIONS

- Load capacity of 99,8.00 metric Tons (220,021.00 lbs);
- Full length: 9,14.00 meters / 30.00 feet ;
-Heavy Duty build: hot-dipped galvanized steel structure;
- Variable loading heights from 106,68 cm /42 inch to 147,32 cm / 58 inch in 5,08 cm / 2 inch increments;
- Safety yellow painted, easy to mount / remove handrails;
- Ramp trackways of 5 feet wide, each;
- Metal blocking pads at the higher end;
-4 Screw Pin Anchor Shackles on each side, for rigging and lifting;
- Forklift pockets for lifting and adjusting height;
- Anti-Slip Heavy Duty Grating;
- Easy to insert metal pin set for height adjustments;
- Heavy Duty Paint and Coating in a wide range of colors;
- Total weight 27.00 metric tones/ 59.524,00 lbs;

Washing Inspection & Maintenance Modular Ramp





The Washing, Inspection & Maintenance Modular Ramp kits are designed to meet every requirement of the above-mentioned activities.

WIMMIN Dimensions:
Length: 5,00 meters/ 19 feet
Width: 4.82,00 meters/ 15.83 feet
Height: 1.295,40 meters/ 4 feet

WIMMST Dimensions:
Length: 5,00 meters/ 19 feet
Width: 4.82,00 meters/ 15.83 feet
Height: 1.295,40 meters/ 4 feet

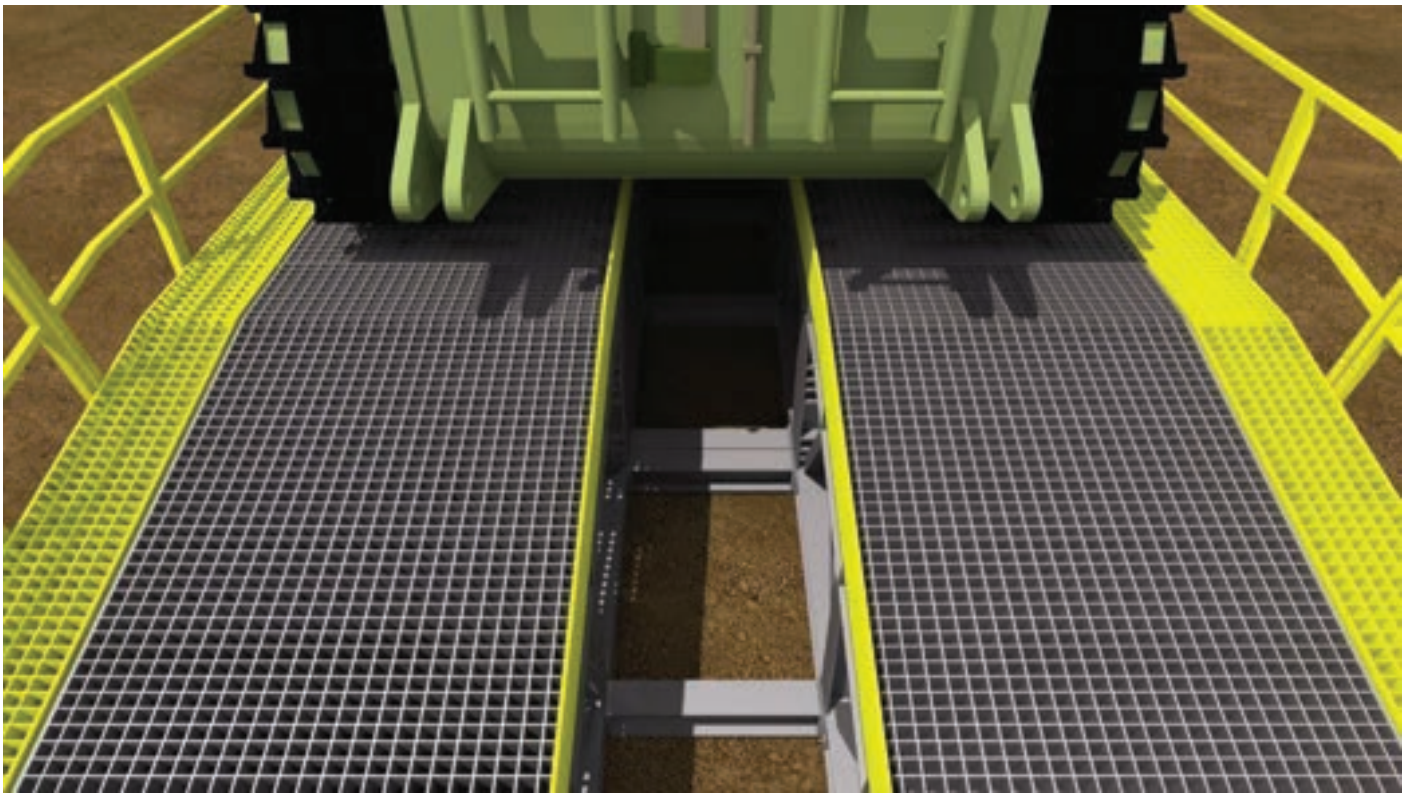

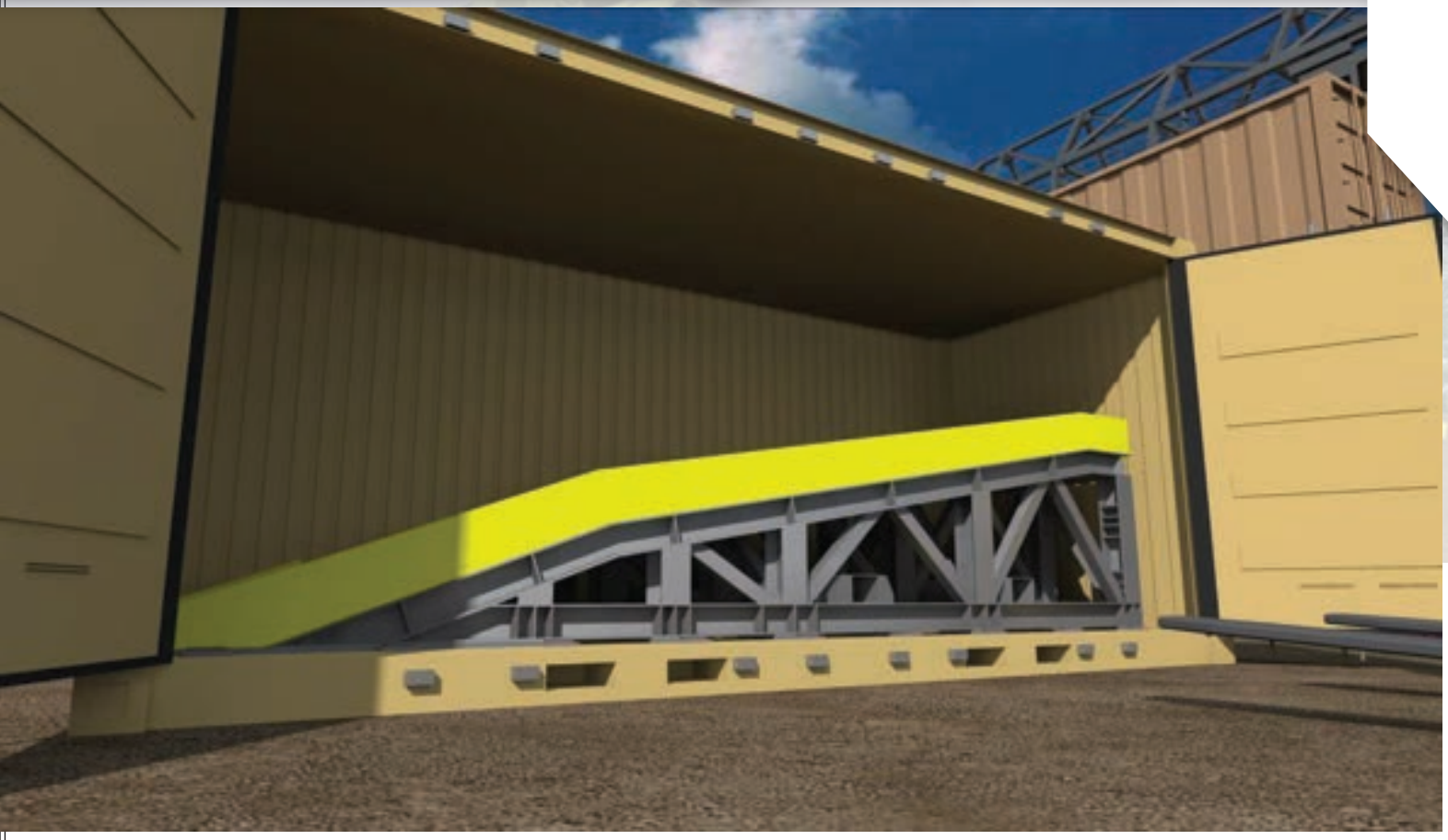



DESIGNED FOR HEAVY ARMOR;
BUILT TO LAST AND SUSTAIN HEAVY LOADS;
EASYER TO DEPLOY AND CONFIGURE WHEN COMPARED TO PERMANENT SITE RAMPS;
VERSATILE OPEN DECK FOR MULTIPLE OPERATIONS;
FULL EXPEDITIONARY, FITTING THE INTIRE SYSTEM IN ISO-CERTIFIED 20" OPEN SIDE CONTAINERS;

The kit consists of either:

- a pair of inclined modules (2 pieces) – WIMMIN
- a pair of flat modules (2 pieces) – WIMMST

Load capacity of 100.00 metric Tons (220.462,00 lbs.) per kit;
Heavy Duty build: hot-dipped galvanized steel structure;
Safety yellow painted, easy to mount /remove Handrails;
Safety yellow painted, easy to mount /remove Personnel Walkway;
Ramp trackways of 1,524.00 meters / 5 feet wide, each;
Bolt-free connectivity for easy configuration according to required operations;
Anti-Slip Heavy Duty Grating;
Heavy Duty Paint and Coating in a wide range of colors;

SANITATION CONTAINERS







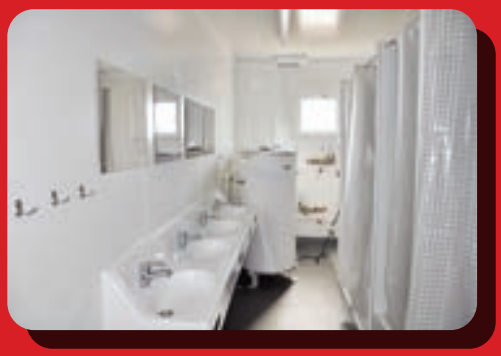





A large number of high-quality equipment options allows you to perfectly customise sanitary and WC cabins to your requirements .



The following are available:

- wash hand basins in different designs;
- shower cubicles with shower curtains;
- non-slip floor cover including skirting;
- shatter-proof metal mirror;
- child-friendly design;
- hydrostatic controlled ventilator;

CONTAINERS



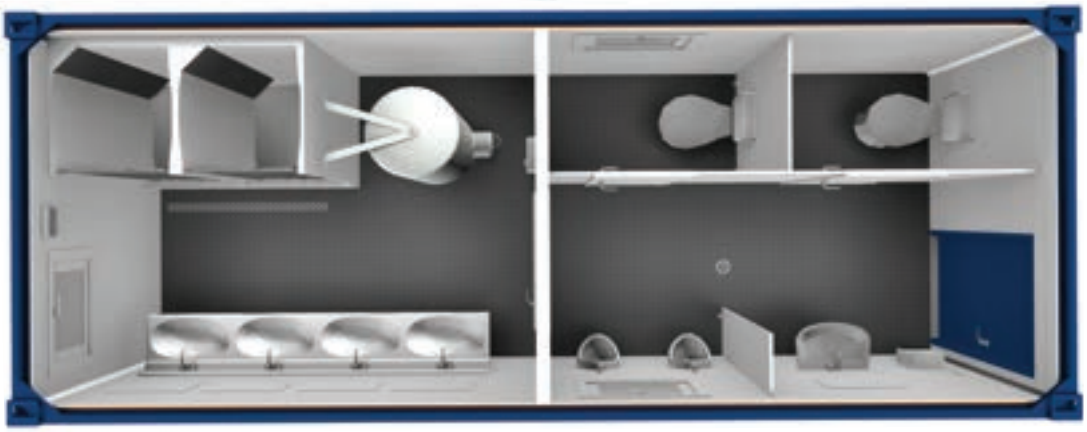



ISO SHIPPING CONTAINERS

10 ft Containers





20 ft Containers

Two sided 20 ft Containers



One side 20 ft Containers





10 ft Shipping Containers





Designed and built for military applications and emergency use, suitable for air, land and sea transport;
-available in both ISO 8'6" and 8';
-with side doors and/or end doors;
-different colour, shades and finishing painting (i.e. anti-infrared);
-40ft, 20ft, Bicon, Tricon and Quadcon configurations (Italian production – TAA compliant);

On demand unit customisation possible.



ROLL UP DOOR 20 ft AND 10 ft SHIPPING CONTAINERS



ON GRID AND OFF GRID 20/40 ft REEFER CONTAINERS



20 & 40FT Refrigerated Containers are available with operating temperatures negative 20 up to plus 4 celsius alimentations power supply 400V 6 point 4kW.
The outfitting of the power supply is made upon customer's request by choosing from a large range of high power diesel generators. High voltage source connections and diesel supply tanks are also available for alternate powering.









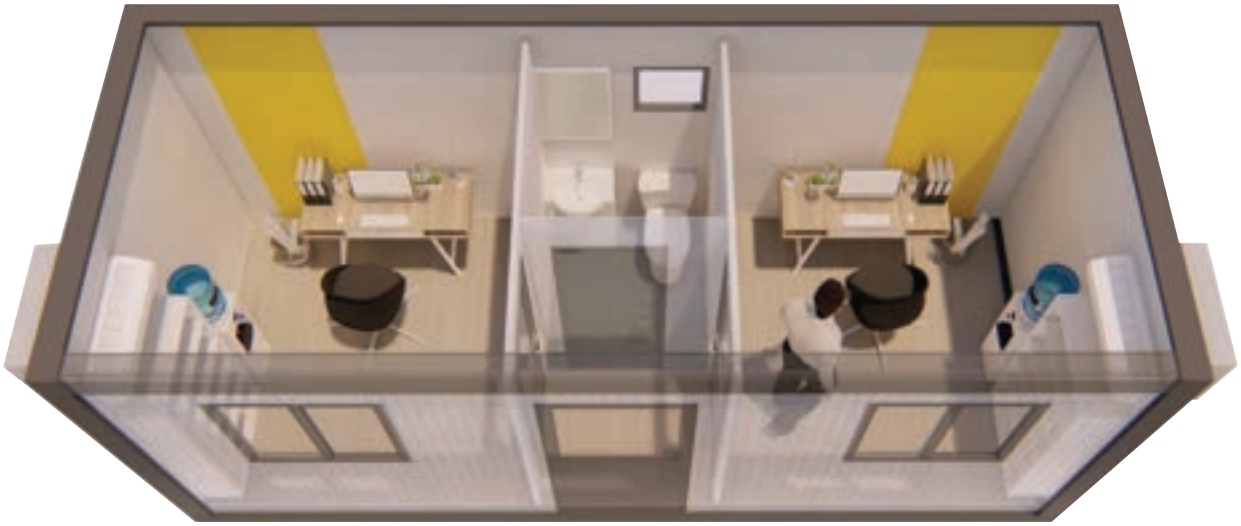




LYPS-154

CUSTOMIZABLE CONTAINERS







CONTAINERS



DR 310 - PROFESSIONAL DEHUMIDIFIER







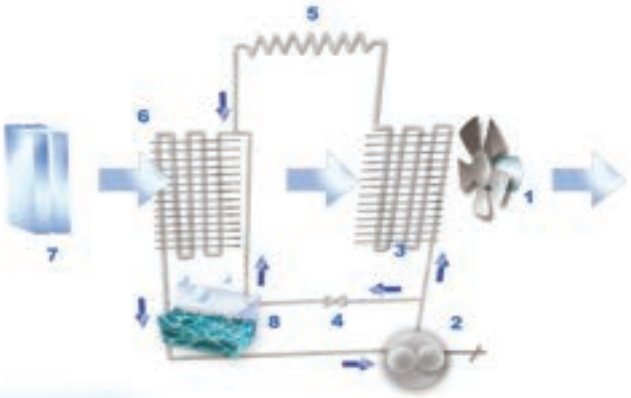



- Hermetic rotary compressor ;
- Built- in humidistat;
- Hour counter;
- Power supply cable with plug ;
-Automatic defrost for low temperatures with hot gas injection;
- Water collection tray ;
- Possibility of direct discharge;
- No pollutants emission;
- Safe and environmentally friendly refrigerant;
- Rubber wheels;
- Tubular handle;
- On / off switch;
- Anomalies warning light ;





WET 450 EL - BA - WET 550 BA - FLOOR CLEANER WITH DISC BRUSHES

-Electric traction (ET) or petrol traction (STH) versions, with Honda engine;
- The 650 ET model is equipped with three motors, one for each function, (suction, brushes, traction);
- The STH version has a single high power motor that using the appropriate mechanical transmissions, drives the various utilities;
- Operator controlled traction by lever placed on the driving handle;
- Wheels and handles for transporting the waste drawer;
- ABS canopy with inspection compartment and front bumper;
- Front pivoting wheel with parking brake;
- Lift flap system for the collection of bulky waste;
- Filtration system with special resin paper pane;l
- Manual shaker filter;
- Central and side brushes in polypropylene;





URSA MAJOR - PROFESSIONAL SINGLE - PHASE STEAM AND VACUUM CLEANER

- Nominal pressure of 10 bar and steam temperature of 190 C;
- Boiler in AISI 304 stainless steel ;
- Steam production : continuous flow with automatic filling system for the possibility of 24 non-stop work ;
- Three-level steam / suction adjustment that can be carried out from the gun handle and LED indication on the machine;
- Ecological detergent injection function combined with the steam jet for deep cleaning and disinfection;
- High performance hot water / hydro (ID) injection function;
- Top-of-the-range single-phase cleaner: robust but at the same time easy to transport due to the side recessed handles, the push handle located at the rear of the machine and the 5 sturdy and non-marking swivel wheels;



-The machine produces dry, saturated, quality steam and is able to sanitize and sanitize multiple surfaces;
- The intelligent management of the internal component and the distributions of the of the appliance allows significant energy saving;
- Wide range of accessories for cleaning in any type of environment;



TH - FIXED INDUSTRIAL VACUUMS

- Fixed vacuum cleaners for continuous work;
- Suitable for removing dust and solid materials from work surfaces;
- Normally installed on board production machines;
- Can also be easily transported and moved thanks to the optional wheels with brakes;
- Powerful motor / turbine unit that allows uninterrupted use without particular maintenance;
- Manual filter shaker (automatic filter shaker available on request);
- Various filters available for different applications;





- Adjustable central brushes to adapt the machine to the type of floor to be cleaned;
- Control panel with ignition key and electronic battery charge status indicator (ET);
- The battery versions have a working autonomy ranging from min. 2.2/3 hours for mod 650 ET at 3/3.5 hours for model 850 ET (with recommended batteries in full state of charge);







CLEANING SOLUTIONS

EX 40 - 80 - LIQUID VACUUM CLEANER & INJECTION/EXTRACTION MACHINE











- The equipment combines all the features of a vacuum / liquid cleaner with an injection / extraction machine in a single device;

- The cleaning solution is sprayed directly on the surface to be cleaned through a special low pressure injection pump;

-The special accessories used for this purpose are also useful for their mechanical action in cleaning and stain removal of surfaces;

- Powerful motors remove dirt and liquids from surfaces leaving them completely dry;
-An extremely safe and effective way to properly wash and clean even the most delicate fabrics and surfaces such as carpets, upholstery, mattresses, car interiors, floors, walls, etc.
-New models EX 80 P PRO and EX 80 M PRO for the demanding professional: built with diaphragm pump with bypass and integrated pressure switch specially designed, tested and tested in the most severe working conditions;





AS 3 - PROFESSIONAL DRYER FOR CAR INTERIORS

Combining an electric hot air generator, diffusion pipes and air containment sheets allows the drying of seats, mats, trunk in a very short time, considerably speeding up the delivery times of the car.

- Silent backward curved radial fan;
- Structure in AISI 430 stainless steel;
- Dryer base installed on four sturdy wheels for added stability;
- AISI 321 armored electric resistances wound with high heat exchange profile;
- Power selector;
- Manual reset safety thermostat;
- Non-marking rubber wheels;
- Rubber bumper for impact protection;
- Power cable (1.5 m) with schuko plug;

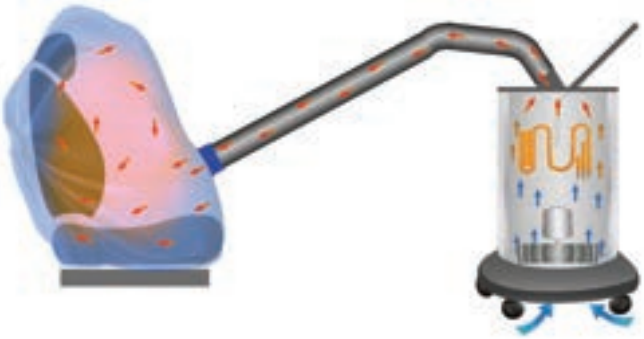

CLEANING SOLUTIONS

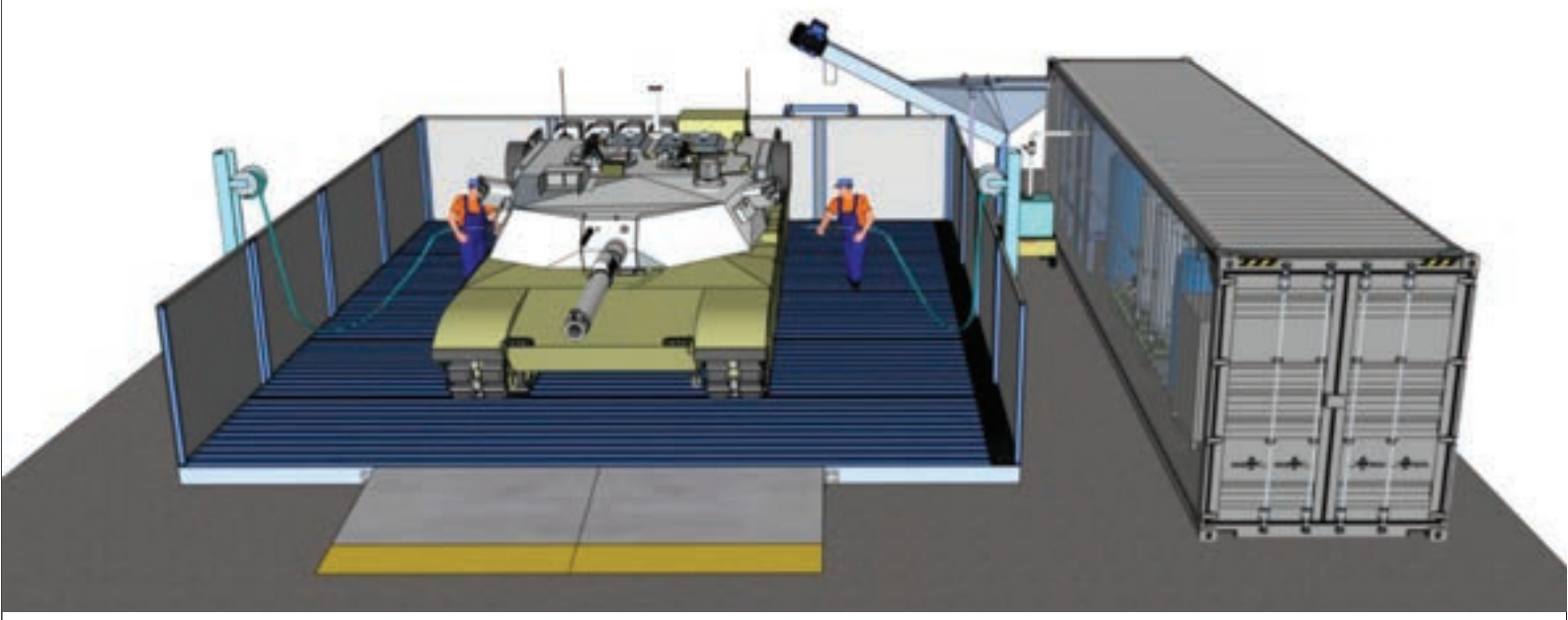

Description:

Mobile Washrack main features :

-dip galvanized steel Washing skid ~10 mters wide, ~9 meters long and ~200 mm high;

-deep galvanized side protection panels (2 meters high);

- S355 carbon steel entry ramp - 2 piece assembly; each element is 2.4 meters wide and two/three meters long. Total width: 4.8 meters;

- wastewater, sludge and oil drain to the water treatment system;

- total washing area : ~ 90 m;

- weight of the structure : ~25,200 kg ;

-mobile system: without excavation and construction works (only concrete platform);

- loading capacity : 80, 000 kg;





The centralized washing plant Clean mod. MHV -150-42 (high pressure water -cold water) main features :

- two high pressure pump 150 bar (2,175 psi adjustable)21+21 liters per minute;
- two three phase motor 10 HP; 7,5 kW; 415 V, 50 Hz, 1.450 r.p.m (total 15 kW);
- pressure gauge with glycerin;
- stainless steel chassis;
- electrical and hydraulic coupling;
- electric control panel;
- excluding diesel tank;

Personalized chemical/physical purification plant, comprising of :

- submersible pump for the extraction of the wastewater;
- automatic grit separator;
- Big- Bag filter for sludge collection;
- electrical and hydraulic connection;
- assembly;

-sludge separation, extraction and pumping into Big-Bags;

- coalescence oils and hydrocarbons separator;
- oil collection tank;
- safety tank;

WASH RACK

Main Characteristics:

- steel cover consisting of two intependent lockablehinged lids gas pistons operated;
-top lifting lugs located in the corner supports;
-forklift pockets on each side of the container;
-appropriate anchorage points for fixing during transport;
- connection of the generator sets possible even with the lids closed and locked;
- drainage pipe to fully empty the external container, provided with safety cap;

- 4 stroke work cycle, direct injection;
- fuel consumption at 3/4 of the load :12.4 l/ h ;
-12 V electric starter with motor ;
- start -up batteries of adequate capacity ;
-Basement in electrically welded steel to support the motor-alternator unit, complete with rubber anti-vibration mounts;
- alternator of primary Italian brand, synchronous three- phase brushless, self- excited and self- regulated;
- nominal power : kVA 75 equal to 60 kW with a value of 0.8;
- nominal voltage : 400 V three- phase with neutral ;
- frequency : 50 Hz ;
- rotation speed : 1500 rpm;
- electronic voltage regulator protection : IP 21/23;
- insulation class : H ;
- 1000 liter fuel tank with its collections basin and complete with minimum level indicator and use connections;
- electric control panel for operating manual;
- outdoor silent cabin made of 2 component treated and painted 2/10 sheet metal , weatherproof , with relevant doors for inspection,control and maintenance of the generator set. Air inlet and outlet chamber with sound absorbing septa. Residential silencer muffler mounted on the roof of the same. Internal coating with class 1 material ,reaction to fire according to VV.FF. Residual noice 70+ 3 dB (A) at 7 meters distance;
- technical documentation with use and maintenance booklet;

Dinensions:

2,300 x 1,000 x 1,500 mm , weight 1,260 kg;



SKID - AUTONOMOUS PROFESSIONAL HOT WATER HIGH PRESSURE CLEANERS





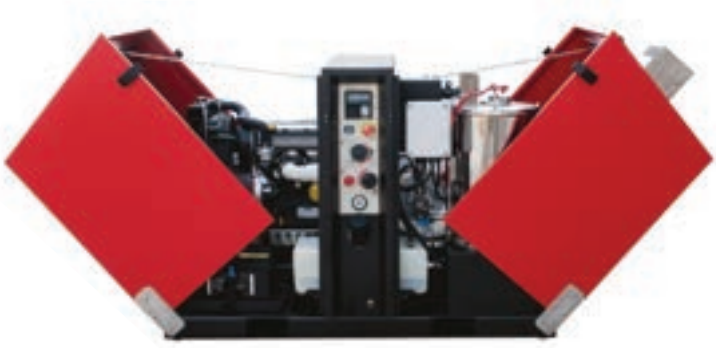



-KOHLER diesel engine: air-cooled twin-cylinder for mod. 200/15 and 3 liquid-cooled cylinders for mod. 250/15;
-High performance boiler with 12 VDC power supply;
-High pressure pump with ceramic pistons, brass head and by-pass valve;
-Large water tank with float tap;
-Detergent dispensing with regulating tap;
-Pressure regulation valve accessible from the outside;
-Tilting sheet metal hoods for maintenance;
-Electric starting by battery;
-Low noise;
-A single large diesel tank for engine and boiler with 3 up to 6 hours of autonomy;
-Provision base for forklift handling;
-Electric panel with level and anomaly signals;







MOBILE COLD WATER HIGH-PRESSURE CLEANERS WITH INTERNAL COMBUSTION ENGINE

- Honda (GX) and Loncin combustion engine, overhead valves,4-stroke and diesel Kohler, air-cooled;
- Triplex water pump with three ceramic pistons and brass or nickel head;
- Hydraulic motor brake;
- Deceleration of the motor in by-pass phase to prevent pump overheating ;
- Reducing consumption and noise;
- Oil level warning system ;
- Low pressure detergent injection;
- Easy to inspect water filter;
- Thermal relief safety valve ;
- Machine structure made of steel with robust frame;
- Supports for lance and hose and provision for mounting a hose reel (optional);



Supplied accessories:

- Spray gun with Semi-lance and swivel;
- ¼ M Nozzle;
- 50 cm Lance with adjustable nozzle;
- Hose connector, threaded tap adaptor with filter;

Accessories on request:

- MANUAL HOSE REEL FOR HIGH PRESSURE HOSE from 20 m up to 40 m length;
- PIPE CLEANING KIT;
- TURBO NOZZLE KIT;
- SANDBLASTING KIT;



Technical Specifications:

MAX PRESSURE: FROM 180 TO 250 BAR;
MAX FLOW RATE: FROM 720 UP TO 1260 LITERS/HOUR;
PUMP SPEED: FROM 1450 UP TO 3400 RPM;
ENGINE START: ELECTRIC/RECOIL;
FUEL CONSUMPTION: 1.6 TO 3.3 LITERS;
FUEL TANK CAPACITY: 3.1/3.6/4.3/6.1/6.5 LITERS;



SUPER - PROFESSIONAL HOT WATER HIGH PRESSURE CLEANERS









- ACDS: Advanced control with delayed stop;
- Connecting rod pumps with ceramic pistons and brass head;
- 1450 rpm engine;
- Motor / pump coupling protection with special lubricant containment system;
- Pressure regulation valve;
- High pressure detergent dispensing;
- Feed water tank with float valve;
- Water filter that can be inspected from outside the machine;
- Boiler with efficiency higher than 89%;
- Boiler pre-ventilation;
- Motor thermal protection;
- Check for leaks;
- Automatic shutdown due to lack of use after 20 min.;
- Anti-limescale system adjustable from 35 to 270 mml / h;
- Two free wheels and one pivoting with brake;
- Memory module for period of operation with LED signaling when the "scheduled maintenance" period is reached;
- "Machine ready" and "anomalies" signaling led;
- Storage compartment with valve adjustment access;
- Hose reel suitable mount (optional);

COMBY - AUTONOMOUS PROFESSIONAL HOT WATER HIGH PRESSURE CLEANERS





- KOHLER engine for diesel engines, HONDA for petrol engines: air-cooled single cylinder;
- Electric battery start (not supplied as standard);
- Low noise;
-High performance boiler with 12 VDC powersupply;
- High pressure pump with ceramic pistons, brass head and by-pass valve;
- Thick tube structure and AISI 430 stainless steel hoods;
- Provision base for forklift handling;
- Electrical panel with boiler thermostat;
- Anchor anti-vibration mounts ready (optional kit);
- Wheel mounting by with axle, support pegs and handles ready (optional kit);

Cabin Baggage Scanner GILARDONI FEP ME 640, tunel size 60 x 40 cm, tip software installed



FEP ME 640, THE REAL COST-EFFECTIVE CHECKPOINT CHOICE

Superior B&W and colour image quality;
Designed to show threat items and organic materials inside carry-on bags;
Ideal for the aviation market;
The perfect solution for best performance;
With the brand new photocell bar it is idea for scanning items of any shape;
Advanced service software;
User friendly;

TECHNICAL SPECIFICATIONS

Dimensions: 2280mm (L) x 905mm (W) x 1255mm (H);
Weight: 450kg;
Inspection tunnel size: 606mm (W) x 405mm (H);
Conveyor belt height: 680mm (regolabile);
Belt speed: 0.2m/s;
Maximum bag weight: 165kg;
1 monitor LCD widescreen;
Power supply: Single phase 230 Vac ± 10%;
Frequency: 50/60Hz +/- 3Hz;
Power absorption: ≤ 1.5kVA;
Duty cycle: 100%;

WALK THROUGHT METAL DETECTOR ECAC AND TSA COMPLIANT MODEL PD 6500I







PORTABLE METAL DETECTOR MODEL GARRETT SUPER SCANNER V



Complete scanning pax-terminal for military/civillian airports

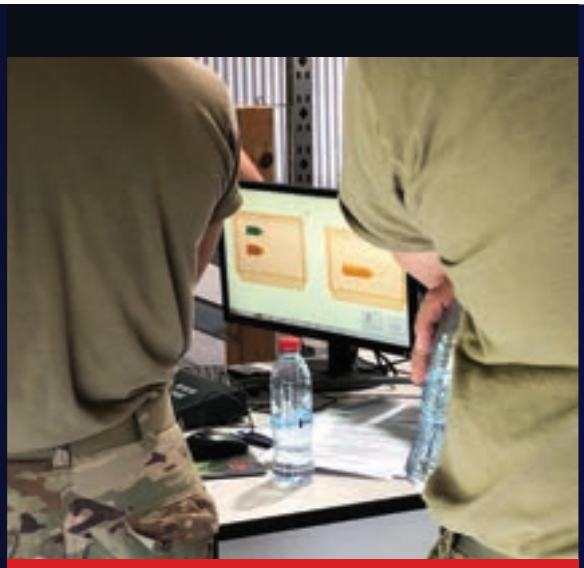

TECHNICAL SPECIFICATIONS

Dimensions: 2980mm (L) x 1335mm (W) x 1975mm (H);
Weight: 850kg;
Tunnel size: 1006mm (W) x 1010mm (H);
Conveyor belt height: 790mm (adjustable);
Belt speed: 0.2m/s;
Maximum bag weight: 200kg;
1 LCD widescreen monitor;
Power supply: Monophase 230VAC +/- 10%;
FFrequency: 50/60Hz +/- 3Hz;
Power absorption: 1.5kVA;
Duty cycle: 100%;

X-RAY GENERATOR

High frequency monobloc;
Tube voltage: 160kV;
Tube current: 2mA;
Beam orientation: Diagonal upwards;



Roller Conveyor system with Adjustable Height (50 feet for Large Baggage Scanner GILARDONI FEP ME 1000 HC and 50 feet for Cabin Baggage Scanner GILARDONI FEP ME 640)



MAGUS Geosensor Protector System (Magu GeoPS)

is an outdoor perimeter intrusion detection system (PIDS) that detects and locates the intrusion attempts inside the protected area based on soil vibrations caused by human activity.
The seismic sensors are used to detect vibrations.
The concealed security system is invisible for the intruders providing an early warning alarm.

Magus GeoPS comprises sensors, Processing Units and Software management Platform.
The system can be powered by mains or battery.
It works either stand-alone or integrated with other alarm systems, video security systems through Magus Command & Control platform (Magus CC) or other PSIM platforms.
Through the Artificial Intelligence algorithm, MAGUS GeoPS detects and classifies the activity such as footsteps, vehicles movements, animals, etc., and generates an alarm when an intruder or a vehicle approaches the protected perimeter line.
It is also able to accurately locate multiple simultaneous intrusion events.

TYPICAL APPLICATIONS:

Small/medium/large industrial facilities;
Power plants;
Military facilities;
Critical infrastructures;
Residential areas;
Magus Geosensor Protector System (Magus GeoPS) is resistant to harsh weather conditions and can be installed in a variety of soils and terrains;
The vegetation, wind, rain do not affect the accuracy of the detections;

HOW IT WORKS:

The signals generated by the vibration sensors, are received by Magus GeoPS Processing Unit, (MGEOPSU), which analyses these signals and generates an alarm warning (event) warning, when vibrations are produced by footsteps, vehicles, digging, tunnelling or other form of activity, above or below ground.
Through an Artificial Intelligence algorithm, the system identifies and classifies the alarms/ warnings (events), according to the type or pattern of vibration. Additionally, the system learns the environment, getting more accurate with time and reducing false alarms.

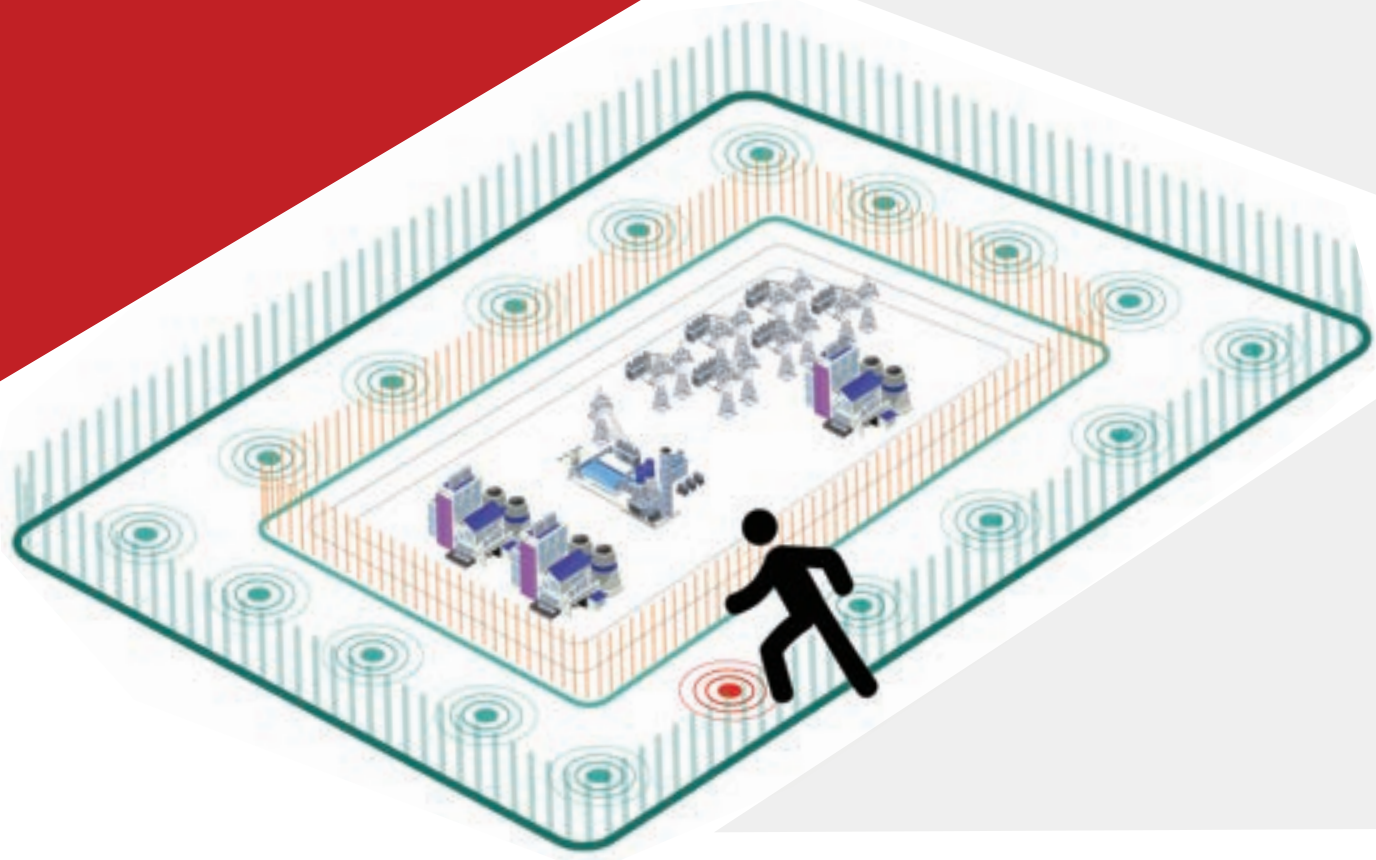

MAGUS FENCE PROTECTOR SYSTEM

Magus Fence PROTECTOR System (Magus FPS) offers best-in-class performance to handle the most challenging security scenarios. The product provides complete perimeter protection; ideal for critical infrastructures, and it can operate independently as a stand-alone solution, or can be integrated into a complex Perimeter Intrusion Detection System (PIDS).

TYPICAL APPLICATIONS:

Small/medium/large industrial facilities;
Power plants;
Military facilities;
Critical infrastructures;
Residential area;s
Magus Fence Protector (Magus FPS) works in harsh weather environments with extremely low false alarms. Magus;
FPS has multilayers of false alarm filtration;
No calibration, no training, easy to install, dry contact relay outputs;

HOW IT WORKS

The 'cut or climb' intrusion attempts produce vibrations on the fence and on the sensor cable. The vibrations generate an electric signal through the sensor cable that is detected by the Magus FPS Processing Unit (MFPSPU).

The MFPSPU analyzes the signal and generates an alarm.
The MFPSPU is connected to an Alarm System or to a Physical Security Information Management-PSIM software platform (an alarm monitoring software). An intelligent detection algorithm classifies the type of alarms as a true positive alarm (cut or climbing attempts) or false positive alarm (generated by wind, rain, hailstones).

INNOVATIVE PRODUCTS

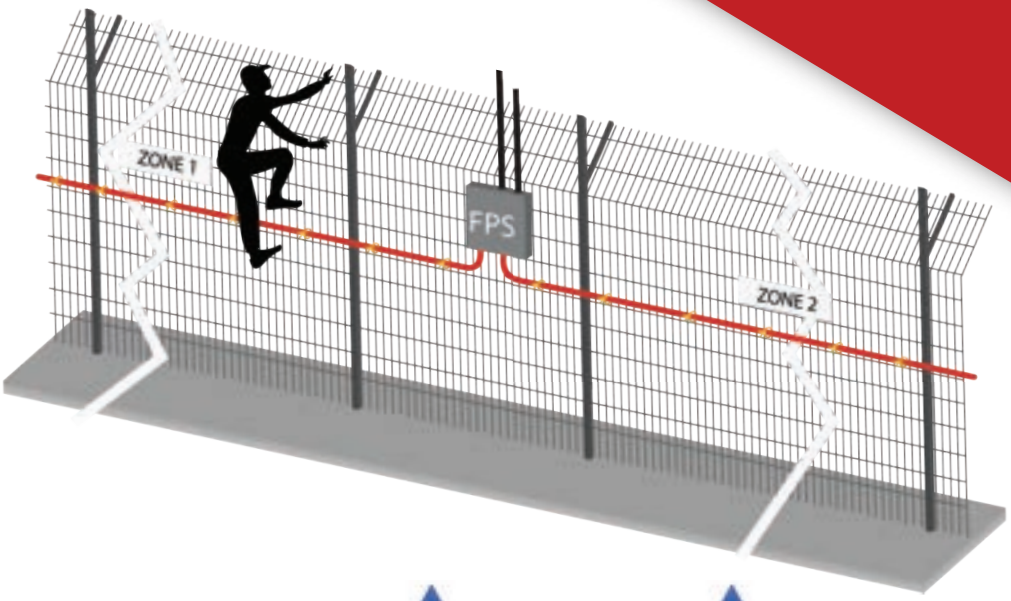

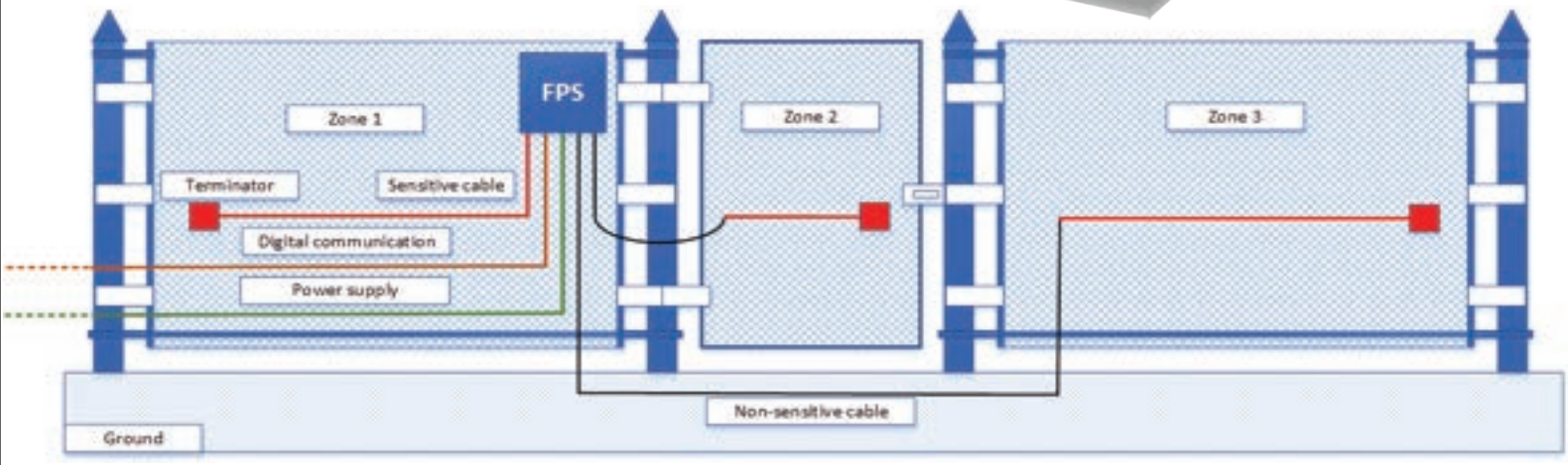

PARTNERS

RP advertising

GeoGlobe® Europe

SICOM

KOHLER. IN POWER. SINCE 1920.

BM2 BIEMMEDUE heating, cleaning and drying

MECLUBE

PARCON FREIWALD enjoy german quality

Mladin Ioana DESIGNER

SOUDAL

MIRA TECHNOLOGIES GMBH